EXPOSITION LIGHT RAIL TRANSIT PROJECT- PHASE 2, DESIGN BUILD CONTRACT NO. XP8902-002

CDRL SUBMITTAL 01102-3.3.3.11A - FINAL CIVIL SEGMENT 3C CITY OF SANTA MONICA
APPROVED FOR CONSTRUCTION - OCTOBER 19, 2012

ROADWAY IMPROVEMENTS

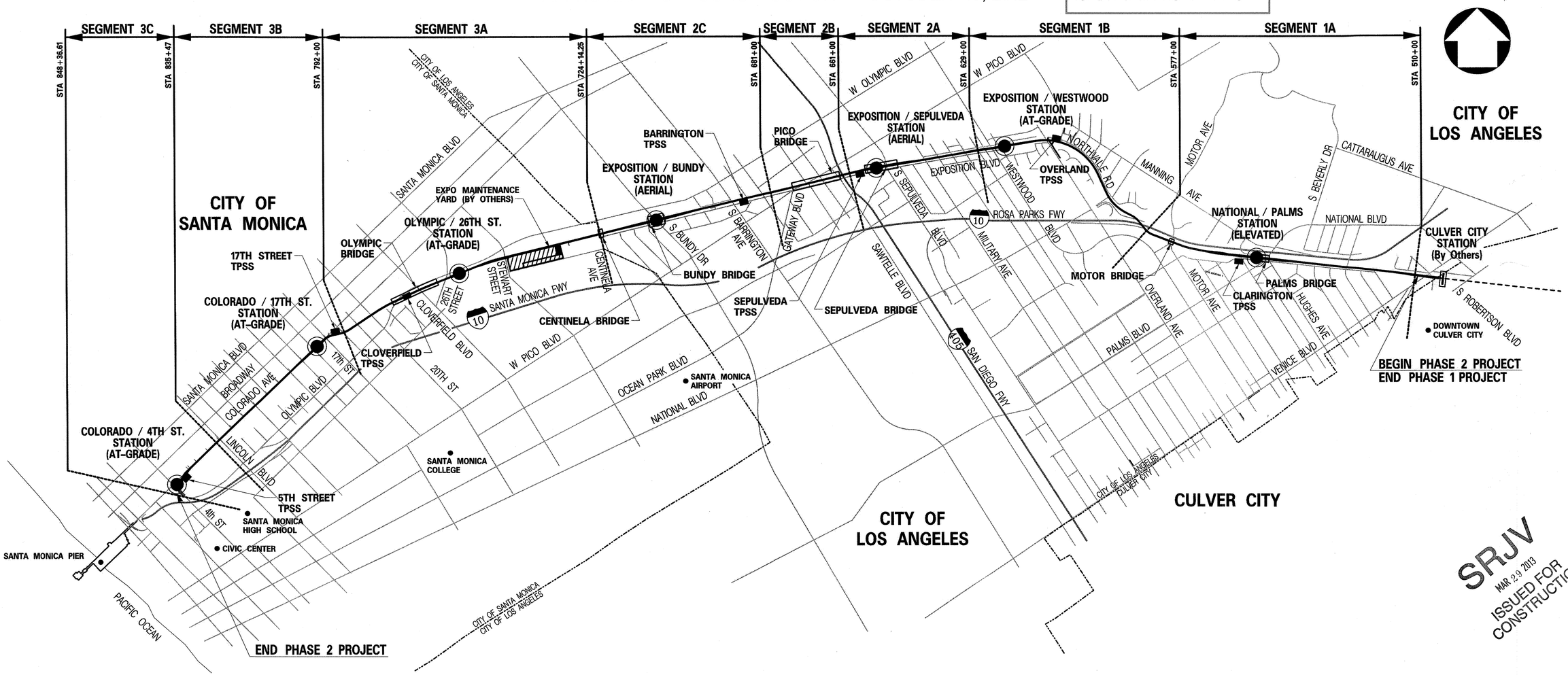

SRJV
MAR 29 2013
ISSUED FOR CONSTRUCTION

EXPOSITION LIGHT RAIL TRANSIT PROJECT

EXPO SKANSKA RADOS

444 South Flower Street
Suite 2200
Los Angeles, CA 90071
TEL (213) 443-7463
FAX (213) 362-9481

PARSONS BRINCKERHOFF

APPROVED: _____ ENGINEERING MANAGER DATE 10-19-12

APPROVED: _____ DESIGN BUILD MANAGER DATE 10/19/12

CURRENT STATUS

EXPOSITION METRO LINE CONSTRUCTION AUTHORITY
Expo

Exposition Construction Authority
Approved for Construction
Drawings - AFC
MAR 28 2013

APPROVED: _____ AUTHORITY - PROJECT MANAGER DATE _____

c:\projectwise\pb\projectwiseint\jonesrobe\dms12556\expo2-g-3C-000.plg
Plot Driver=EXPO2-PDF-Full-BW.plt
Pentable=EXPO2-PENTABLE.TBL jonesrobe 10:13:35 AM 10/16/2012

REV NO	SHT NO	DWG NO	DWG TITLE
			GENERAL DRAWINGS
0	1	G-3C-000	COVER SHEET
0	2	G-3C-001	GENERAL CIVIL SEGMENT 3C CITY OF SANTA MONICA INDEX OF DRAWINGS SHEET 1 OF 2
0	3	G-3C-002	GENERAL CIVIL SEGMENT 3C CITY OF SANTA MONICA INDEX OF DRAWINGS SHEET 2 OF 2
0	4	G-301	GENERAL STREET IMPROVEMENTS GENERAL NOTES SHEET 1 OF 2
0	5	G-302	GENERAL STREET IMPROVEMENTS GENERAL NOTES SHEET 2 OF 2
0	6	G-3A-303	GENERAL STREET IMPROVEMENT MISCELLANEOUS ABBREVIATIONS SHEET 1 OF 3
0	7	G-3A-304	GENERAL STREET IMPROVEMENT MISCELLANEOUS ABBREVIATIONS SHEET 2 OF 3
0	8	G-3A-305	GENERAL STREET IMPROVEMENT MISCELLANEOUS ABBREVIATIONS SHEET 3 OF 3
0	9	G-3A-306	GENERAL STREET IMPROVEMENT SYMBOLS AND LEGEND SHEET 1 OF 2
0	10	G-3A-307	GENERAL STREET IMPROVEMENT SYMBOLS AND LEGEND SHEET 2 OF 2
			TYPICAL SECTIONS
0	11	CX-3C-301	STREET IMPROVEMENTS COLORADO AVENUE TYPICAL SECTIONS STA 10+55.00 TO 23+50.00
0	12	CX-3C-302	STREET IMPROVEMENTS 5TH AND 6TH STREET TYPICAL SECTIONS
0	13	CX-3C-303	STREET IMPROVEMENTS 7TH STREET TYPICAL SECTIONS STA 9+16.16 TO 10+75.00
			DEMOLITION PLANS
0	14	DK-3C-301	DEMOLITION COLORADO AVENUE KEY MAP STA 7+50 TO 23+50
0	15	D-3C-301	DEMOLITION COLORADO AVENUE PLAN STA 7+50 TO 12+00
0	16	D-3C-302	DEMOLITION COLORADO AVENUE PLAN STA 12+00 TO 16+50
0	17	D-3C-303	DEMOLITION COLORADO AVENUE PLAN STA 16+50 TO 21+00
0	18	D-3C-304	DEMOLITION COLORADO AVENUE PLAN STA 21+00 TO 23+50
0	19	D-3C-305	DEMOLITION 5TH STREET PLAN STA 7+00 TO 11+50
0	20	D-3C-306	DEMOLITION 6TH STREET PLAN STA 8+00 TO 12+00
0	21	D-3C-307	DEMOLITION 7TH STREET PLAN STA 8+00 TO 12+00
			STREET IMPROVEMENT PLANS
0	22	CK-3C-301	STREET IMPROVEMENTS COLORADO AVENUE KEY MAP STA 7+50 TO 23+50
0	23	CA-3C-301	STREET IMPROVEMENTS COLORADO AVENUE PLAN & PROFILE STA 7+50 TO 12+00
0	24	CA-3C-302	STREET IMPROVEMENTS COLORADO AVENUE PLAN & PROFILE STA 12+00 TO 16+50
0	25	CA-3C-303	STREET IMPROVEMENTS COLORADO AVENUE PLAN & PROFILE STA 16+50 TO 21+00
0	26	CA-3C-304	STREET IMPROVEMENTS COLORADO AVENUE PLAN & PROFILE STA 21+00 TO 23+50
0	27	CA-3C-305	STREET IMPROVEMENTS 5TH STREET PLAN & PROFILE STA 7+00 TO 11+50
0	28	CA-3C-306	STREET IMPROVEMENTS 6TH STREET PLAN & PROFILE STA 8+00 TO 12+00
0	29	CA-3C-307	STREET IMPROVEMENTS 7TH STREET PLAN & PROFILE STA 8+00 TO 12+00
0	30	C-3C-301	STREET IMPROVEMENTS COLORADO AVENUE INTERSECTION DETAILS 5TH STREET
0	31	C-3C-302	STREET IMPROVEMENTS COLORADO AVENUE INTERSECTION DETAILS 6TH STREET
0	32	C-3C-303	STREET IMPROVEMENTS COLORADO AVENUE INTERSECTION DETAILS 7TH STREET
0	33	C-3C-304	STREET IMPROVEMENTS 4TH STREET & 5TH STREET PLAN CURB RAMP DETAILS
0	34	C-3C-305	STREET IMPROVEMENTS COLORADO AVENUE & 5TH STREET PLAN CURB RAMP DETAILS
0	35	C-3C-306	STREET IMPROVEMENTS COLORADO AVENUE & 5TH STREET PLAN CURB RAMP DETAILS
0	36	C-3C-307	STREET IMPROVEMENTS COLORADO AVENUE & 6TH STREET PLAN CURB RAMP DETAILS
0	37	C-3C-308	STREET IMPROVEMENTS COLORADO AVENUE & 6TH STREET PLAN CURB RAMP DETAILS
0	38	C-3C-309	STREET IMPROVEMENTS COLORADO AVENUE & 7TH STREET PLAN CURB RAMP DETAILS
0	39	C-3C-310	STREET IMPROVEMENTS COLORADO AVENUE & 7TH STREET PLAN CURB RAMP DETAILS
			CONSTRUCTION DETAILS
0	40	CC-3C-301	STREET IMPROVEMENTS COLORADO AVENUE CONSTRUCTION DETAILS SHEET 1 OF 2
0	41	CC-3C-302	STREET IMPROVEMENTS COLORADO AVENUE CONSTRUCTION DETAILS SHEET 2 OF 2
			STORM DRAIN PLANS
0	42	SDK-3C-301	STORM DRAIN SEGMENT 3C KEY MAP
0	43	CGG-301	GRADING & DRAINAGE CONSTRUCTION NOTES
0	44	CD-3C-301	STORM DRAIN SEGMENT 3C COLORADO AVE / 4TH ST PLAN & PROFILE STA 10+00 TO 12+50
0	45	CD-3C-302	STORM DRAIN SEGMENT 3C COLORADO AVE / 5TH ST PLAN & PROFILE STA 12+50 TO STA 15+40
0	46	CD-3C-303	STORM DRAIN SEGMENT 3C COLORADO AVE / 6TH ST PLAN & PROFILE STA 15+40 TO STA 19+80
0	47	CD-3C-304	STORM DRAIN SEGMENT 3C COLORADO AVE / 7TH ST PLAN & PROFILE STA 19+80 TO STA 23+97

REV NO	SHT NO	DWG NO	DWG TITLE
			STORM DRAIN PLANS (CONT)
0	48	SDP-3C-301	STORM DRAIN SEGMENT 3C PROFILES
0	49	SDP-3C-302	STORM DRAIN SEGMENT 3C PROFILES
0	50	SDP-3C-303	STORM DRAIN SEGMENT 3C PROFILES
			WATER RELOCATION PLANS
0	51	UW-3C-101	WATER RELOCATION VICINITY MAP & KEY MAP
0	52	UW-3C-102	WATER RELOCATION CONSTRUCTION NOTES
1	53	UW-3C-201	WATER RELOCATION COLORADO AVE PLAN & PROFILE STA 9+50 TO STA 13+00
0	54	UW-3C-202	WATER RELOCATION COLORADO AVE PLAN & PROFILE STA 13+00 TO STA 16+50
0	55	UW-3C-203	WATER RELOCATION COLORADO AVE PLAN & PROFILE STA 16+50 TO STA 20+00
0	56	UW-3C-204	WATER RELOCATION COLORADO AVE PLAN & PROFILE STA 20+00 TO STA 23+50
0	56A	UW-3C-205	DESIGN EXHIBIT 4TH STREET WATER RELOCATION FOR PROPOSED SCE
0	57	UW-3C-301	WATER RELOCATION CROSS SECTIONS 1 OF 3
0	58	UW-3C-302	WATER RELOCATION CROSS SECTIONS 2 OF 3
0	59	UW-3C-303	WATER RELOCATION CROSS SECTIONS 3 OF 3
1	60	UW-3C-401	WATER RELOCATION CONNECTION DETAILS 1 OF 4
0	61	UW-3C-402	WATER RELOCATION CONNECTION DETAILS 2 OF 4
0	62	UW-3C-403	WATER RELOCATION CONNECTION DETAILS 3 OF 4
0	63	UW-3C-404	WATER RELOCATION CONNECTION DETAILS 4 OF 4
0	64	UW-3C-501	WATER RELOCATION MISCELLANEOUS DETAILS
0	65	UW-3C-502	WATER RELOCATION CATHODIC PROTECTION DETAILS
			RECLAIMED WATER RELOCATION PLANS
0	66	URW-3C-101	RECLAIMED WATER RELOCATION VICINITY MAP & KEY MAP
0	67	URW-3C-102	RECLAIMED WATER RELOCATION CONSTRUCTION NOTES
0	68	URW-3C-201	RECLAIMED WATER RELOCATION PLAN & PROFILE COLORADO AVE STA 9+50 TO STA 13+00
0	69	URW-3C-202	RECLAIMED WATER RELOCATION PLAN & PROFILE COLORADO AVE STA 13+00 TO STA 16+50
0	70	URW-3C-203	RECLAIMED WATER RELOCATION PLAN & PROFILE COLORADO AVE STA 16+50 TO STA 20+00
0	71	URW-3C-204	RECLAIMED WATER RELOCATION PLAN & PROFILE COLORADO AVE STA 20+00 TO STA 23+50
0	72	URW-3C-301	RECLAIMED WATER RELOCATION CROSS SECTIONS
0	73	URW-3C-401	RECLAIMED WATER RELOCATION CONNECTION DETAILS
0	74	URW-3C-501	RECLAIMED WATER RELOCATION MISCELLANEOUS DETAILS
0	75	URW-3C-502	RECLAIMED WATER RELOCATION CATHODIC PROTECTION DETAILS 1 OF 2
0	76	URW-3C-503	RECLAIMED WATER RELOCATION CATHODIC PROTECTION DETAILS 2 OF 2
			SEWER
0	77	US-3C-101	SEWER REARRANGEMENTS VICINITY MAP AND KEY MAP
0	78	US-3C-302	SEWER REARRANGEMENTS PLAN STA 9+50 TO STA 12+50
0	79	US-3C-303	SEWER REARRANGEMENTS PLAN & PROFILE STA 12+50 TO STA 15+50
0	80	US-3C-304	SEWER REARRANGEMENTS PLAN & PROFILE STA 15+50 TO STA 19+50
0	81	US-3C-305	SEWER REARRANGEMENTS PLAN & PROFILE STA 19+50 TO STA 23+50
0	82	US-3C-401	SEWER REARRANGEMENTS SEWER DETAILS
			COMPOSITE UTILITY REARRANGEMENT PLANS
0	83	UR-3C-300	COMPOSITE UTILITY REARRANGEMENT SEGMENT 3C UTILITY KEY MAP CITY OF SANTA MONICA
1	84	UR-3C-301	COMPOSITE UTILITY REARRANGEMENT COLORADO AVE / 4TH ST PLAN STA 8+50 TO STA 11+80
0	85	UR-3C-302	COMPOSITE UTILITY REARRANGEMENT COLORADO AVE / 5TH ST PLAN STA 11+80 TO STA 15+30
0	86	UR-3C-303	COMPOSITE UTILITY REARRANGEMENT COLORADO AVE / 6TH ST PLAN STA 15+30 TO STA 18+80
0	87	UR-3C-304	COMPOSITE UTILITY REARRANGEMENT COLORADO AVE PLAN STA 18+80 TO STA 21+50
0	88	UR-3C-305	COMPOSITE UTILITY REARRANGEMENT COLORADO AVE PLAN STA 21+50 TO STA 23+50
			SIGNING AND STRIPING PLANS
0	89	SSK-3C-301	SIGNING AND STRIPING COLORADO AVENUE KEY MAP STA 6+75 TO 23+50
0	90	SSN-3C-301	SIGNING AND STRIPING COLORADO AVENUE NOTES AND DETAILS
0	91	SS-3C-301	SIGNING AND STRIPING COLORADO AVENUE PLAN STA 6+75 TO 23+50
0	92	SS-3C-302	SIGNING AND STRIPING 4TH STREET AND 5TH STREET PLAN
0	93	SS-3C-303	SIGNING AND STRIPING 6TH STREET AND 7TH STREET PLAN

Exposition Construction Authority
Approved for Construction
Drawings - AFC
NOV 08 2013

SRJV
NOV 08 2013
ISSUED FOR CONSTRUCTION

REV	DATE	BY	APP	REG NO	EXPIRES	SEAL HOLDER	DESCRIPTION
1	5/9/13	DR	PWT	C43086	03/31/14	PETER W. TUCCILLO	ECI12
0	10/19/12	DR	PWT	C43086	03/31/14	PETER W. TUCCILLO	APPROVED FOR CONSTRUCTION

DESIGNED BY D. RODRIGUEZ
DRAWN BY R. JONES
CHECKED BY P. TUCCILLO
IN CHARGE P. TUCCILLO
DATE 10/19/12

REGISTERED PROFESSIONAL ENGINEER PETER W. TUCCILLO No. C43086 Exp. 03-31-14 CIVIL STATE OF CALIFORNIA

Exposition Metro Line Construction Authority
Expo
EXPO SKANSKA RADOS
444 South Flower Street
Suite 2200
Los Angeles, CA 90071
TEL (213) 443-7463
FAX (213) 362-9481

PARSONS BRINCKERHOFF

CURRENT STATUS

EXPOSITION LRT PROJECT- PHASE 2
GENERAL
CIVIL SEGMENT 3C CITY OF SANTA MONICA
INDEX OF DRAWINGS
SHEET 1 OF 2

CONTRACT NO XP8902-002
DRAWING NO G-3C-001 REV 1
SCALE NONE
SHEET NO 2 OF 108

SCALES HORIZ SCALE: VERT SCALE:
SHEET
INDEX NUMBER

REVISION DATE (DESIGN STAGE ONLY)

RodriguezD 7:20:19 AM 5/10/2013
Plot Driver=EXPO2-PDF-Full-BW.plt
Pentable=EXPO2-PENTABLE.tbl
c:\projectwise\pb\projectwiseint\rodriguezd\dms12556\expo2-g-3C-001.plg

Sheet Version 2.01

REFERENCE:
SUBMITTED BY:
CITY DRAWING NO.
SHEET NO. 2 OF 108
APPROVED BY: LEON E. SWAIN, P.E., CITY ENGINEER — ENGINEERING — DATE: 10-28 2013
REVIEWED: DATE: 20
REVIEWED: DATE: 10-28 2013
REVIEWED: DATE: 10-28 2013
CITY

NO.	DATE	BY	DESCRIPTION	APPROVED

REVISIONS

City of Santa Monica
Department of Public Works
1437 4th Street, Suite 300 Santa Monica, CA 90401
TEL. (310)458-8721 FAX. (310)393-4425
e-mail : smengineering@smgov.net

Plotted by: RodriguezD 5/10/2013 c:\projectwise\pb\projectwiseint\rodriguezd\dms12556\expo2-g-3C-001.plg

REV NO	SHT NO	DWG NO	DWG TITLE
			TRAFFIC SIGNAL PLANS
0	94	TRK-3C-301	TRAFFIC SIGNAL COLORADO AVENUE KEY MAP STA 7+50 TO 23+50
0	95	TRN-3C-301	TRAFFIC SIGNAL COLORADO AVENUE NOTES AND DETAILS
0	96	TR-3C-301	TRAFFIC SIGNAL COLORADO AVENUE AT 4TH STREET PLAN
0	97	TR-3C-302	TRAFFIC SIGNAL COLORADO AVENUE AT 5TH STREET PLAN
0	98	TR-3C-303	TRAFFIC SIGNAL COLORADO AVENUE AT 6TH STREET PLAN
0	99	TR-3C-304	TRAFFIC SIGNAL COLORADO AVENUE AT 7TH STREET PLAN
			CCTV PLANS
0	100	TVK-3C-301	CCTV COLORADO AVENUE KEY MAP STA 7+50 TO 23+50
0	101	TV-3C-301	CCTV COLORADO AVENUE AT 5TH STREET PLAN
0	102	TV-3C-302	CCTV COLORADO AVENUE AT 6TH STREET PLAN
0	103	TV-3C-303	CCTV COLORADO AVENUE AT 7TH STREET PLAN
			FIBER OPTIC PLANS
0	104	NK-3C-301	FIBER OPTIC COLORADO AVENUE KEY MAP STA 7+50 TO 23+50
0	105	NA-3C-301	FIBER OPTIC COLORADO AVENUE PLAN STA 7+50 TO 23+50
			STREET LIGHTING PLANS
0	106	SLK-3C-301	STREET LIGHTING COLORADO AVENUE KEY MAP STA 7+50 TO 23+50
0	107	SL-3C-301	STREET LIGHTING COLORADO AVENUE PLAN STA 7+50 TO 23+50
0	108	SL-3C-302	STREET LIGHTING 4TH STREET AND 5TH STREET PLAN

SRJV
MAR 29 2013
ISSUED FOR CONSTRUCTION

REV	DATE	BY	APP	REG NO	EXPIRES	SEAL HOLDER	DESCRIPTION
0	10/19/12	DR	PWT	C43086	03/31/14	PETER W. TUCCILLO	APPROVED FOR CONSTRUCTION

DESIGNED BY D. RODRIGUEZ
DRAWN BY R. JONES
CHECKED BY P. TUCCILLO
IN CHARGE P. TUCCILLO
DATE 10/19/12

REGISTERED PROFESSIONAL ENGINEER
PETER W. TUCCILLO
No. C43086
Exp. 03-31-14
CIVIL
STATE OF CALIFORNIA

Exposition Metro Line Construction Authority
Expo

EXPO SKANSKA RADOS
444 South Flower Street
Suite 2200
Los Angeles, CA 90071
TEL (213) 443-7463
FAX (213) 362-9481

PARSONS BRINCKERHOFF
CURRENT STATUS

EXPOSITION LRT PROJECT- PHASE 2
GENERAL
CIVIL SEGMENT 3C CITY OF SANTA MONICA
INDEX OF DRAWINGS
SHEET 2 OF 2

Exposition Construction Authority
Approved for Construction
Drawings - AFC
MAR 28 2013

CONTRACT NO XP8902-002
DRAWING NO G-3C-002 REV 0
SCALE NONE
SHEET NO 3 OF 108

jonesrobe 10:28:09 AM 10/19/2012
Plot Driver=EXPO2-PDF-Full-BW.plt Pentable=EXPO2-PENTABLE.TBL
c:\projectwise\pb\projectwiseint\jonesrobe\dms12556\expo2-g-3C-002.plg

SCALES HORIZ SCALE: VERT SCALE:
SHEET
INDEX NUMBER

REVISION DATES (DESIGN STAGE ONLY)

Sheet Version 2.01

REFERENCE :
SUBMITTED BY: Doug DeVinne
APPROVED BY: LEON E. SWAIN, P.E., CITY ENGINEER
CITY DRAWING NO. 9302
SHEET NO.: 3 OF 108
DATE : 3-11 2013
REVIEWED : DATE : 20
REVIEWED : DATE : 20
REVIEWED : DATE : 3-11 2013
CITY

REVISIONS
NO. DATE BY DESCRIPTION APPROVED

City of Santa Monica
Department of Public Works
1437 4th Street, Suite 300 Santa Monica, CA 90401
TEL. (310)458-8721 FAX. (310)393-4425
e-mail : smengineering@smgov.net

Plotted by: jonesrobe 10/19/2012 c:\projectwise\pb\projectwiseint\jonesrobe\dms12556\expo2-g-3C-002.plg

GENERAL NOTES

1. ALL WORK SHALL BE COMPLETED IN ACCORDANCE WITH THE CONTRACT DOCUMENTS, TECHNICAL SPECIFICATIONS, AND CITY OF SANTA MONICA ORDINANCES AS APPLICABLE.

2. THE CONTRACTOR SHALL BE RESPONSIBLE FOR OBTAINING ALL NECESSARY PERMITS FROM THE CITY OF SANTA MONICA AND ANY OTHER APPROPRIATE JURISDICTIONAL AGENCIES PER THE SPECIAL PERMITTING PROCESS (SPP) AS OUTLINED IN THE MCA.

3. THE CONTRACTOR SHALL BE RESPONSIBLE FOR THE REVIEW OF PROJECT DRAWINGS AND SPECIFICATIONS.

4. PRIOR TO COMMENCING CONSTRUCTION THE CONTRACTOR SHALL VERIFY ALL EXISTING CONDITIONS IN THE FIELD. IF THE FIELD CONDITIONS DIFFER FROM THOSE SHOWN ON THE PLANS THE CONTRACTOR SHALL IMMEDIATELY NOTIFY THE ENGINEER AND SHALL NOT BEGIN CONSTRUCTION UNTIL THE CHANGED CONDITIONS HAVE BEEN EVALUATED AND ADDRESSED. ANY WORK PERFORMED IN CONFLICT WITH THE CONTRACT DOCUMENTS OR ANY APPLICABLE CODE REQUIREMENTS SHALL BE CORRECTED BY THE CONTRACTOR AT THEIR OWN EXPENSE AND AT NO EXPENSE TO THE OWNER OR THE ENGINEER.

5. THE ENGINEER WILL NOT BE RESPONSIBLE FOR, OR LIABLE FOR, UNAUTHORIZED CHANGES TO OR USES OF THESE PLANS. ALL CHANGES TO THE PLANS MUST BE IN WRITING AND MUST BE APPROVED BY THE ENGINEER.

6. NOTES AND DETAILS ON THE DRAWINGS SHALL TAKE PRECEDENCE OVER GENERAL NOTES AND TYPICAL DETAILS. WHERE NO DETAILS ARE GIVEN CONSTRUCTION SHALL BE AS SHOWN FOR SIMILAR WORK.

7. CONTRACTOR SHALL VERIFY ALL DIMENSIONS AND CONDITIONS ON THE JOB, AND SHALL NOTIFY THE ENGINEER OF ANY VARIATION FROM THE DIMENSIONS AND CONDITIONS SHOWN ON THESE PLANS. WRITTEN DIMENSIONS SHALL TAKE PRECEDENCE OVER SCALED DIMENSIONS.

8. ALL DIMENSIONS ARE IN FEET OR DECIMALS THEREOF UNLESS OTHERWISE NOTED.

EXISTING & PROPOSED UTILITIES

9. THE CONTRACTOR SHALL CONTACT UNDERGROUND SERVICE ALERT AT (800) 227-2600 AT LEAST 72 HOURS PRIOR TO EXCAVATION.

10. EXISTING UTILITIES AND STRUCTURES (UNDERGROUND, SURFACE, OR OVERHEAD) ARE INDICATED ONLY TO THE EXTENT THAT SUCH INFORMATION WAS KNOWN, OR MADE AVAILABLE TO, OR DISCOVERED BY THE ENGINEER IN PREPARING THE DRAWINGS. THE LOCATIONS, CONFIGURATIONS, AND ELEVATIONS OF SUBSURFACE FACILITIES AND UTILITIES ARE APPROXIMATE AND NOT ALL UTILITIES AND FACILITIES MAY BE INDICATED. OVERHEAD UTILITIES ARE NOT INDICATED IN ELEVATIONS, PROFILE OR SECTION DRAWINGS.

11. INFORMATION ON LOCATION, SIZES AND DEPTH OF THE EXISTING UTILITIES WAS TAKEN FROM EXISTING DRAWINGS AND DATA, AND IS FOR REFERENCE ONLY. THE CONTRACTOR SHALL BECOME FAMILIAR WITH THE PLANS AND SHALL VERIFY SITE CONDITIONS PRIOR TO THE ORDERING OF MATERIALS AND COMMENCING WORK.

12. BEFORE CONSTRUCTION STARTS, CONTRACTOR SHALL COORDINATE WITH THE OWNER OF EACH UTILITY AND DEFINE THE REQUIREMENTS AND METHODS TO ACCOMMODATE THE PROTECTION, TEMPORARY SUPPORT, ADJUSTMENT, OR RELOCATION OF ANY UTILITIES AFFECTED BY THE PROPOSED WORK. THE CONTRACTOR SHALL EXERCISE CARE WHEN WORKING NEAR EXISTING UTILITIES AND SHALL BE RESPONSIBLE FOR ALL DAMAGE, BREAKAGE, OR LEAKS CAUSED BY HIS WORK.

13. IT WILL BE THE CONTRACTORS'S RESPONSIBILITY TO ADJUST TO FINISHED GRADE EXISTING SEWER AND STORM DRAIN MAINTENANCE HOLES AND COORDINATE ANY OTHER UTILITY BOX COVERS THAT ARE TO BE ADJUSTED BY OTHERS.

14. THE CONTRACTOR IS TO BE AWARE OF ALL OVERHEAD LINES AT ALL TIMES, SO AS NOT TO DISTURB THEM.

15. ALL FIRE HYDRANTS, WATER CONTROL VALVES, AND MAINTENANCE HOLES SHALL BE KEPT FREE FROM OBSTRUCTIONS AND AVAILABLE FOR USE AT ALL TIMES.

16. ALL EXISTING UTILITIES ARE INDICATED AT THEIR HORIZONTAL LOCATION AND DEPTH BASED UPON AS-BUILT INFORMATION, FIELD SURVEY, AND POTHOLE INFORMATION, AND ARE FOR REFERENCE ONLY. THE CONTRACTOR SHALL BECOME FAMILIAR WITH THE PLANS AND SHALL VERIFY SITE CONDITIONS PRIOR TO THE ORDERING OF MATERIALS AND COMMENCING WORK.

17. THE EXACT LOCATION AND DEPTH OF UTILITIES HAVE NOT BEEN INDICATED ON THE PLANS, THE CONTRACTOR SHALL DETERMINE THE EXACT LOCATION OF ALL UTILITIES AND UNDERGROUND FACILITIES PRIOR TO DOING WORK THAT MAY DAMAGE SUCH FACILITIES, IMPACT, OR INTERFERE WITH THEIR SERVICES.

GENERAL NOTES

EXISTING & PROPOSED UTILITIES (CONTINUED)

18. CONTRACTOR SHALL DETERMINE THE LOCATION, DEPTH, AND SIZE OF ALL UTILITIES, INCLUDING SERVICE CONNECTIONS AND LATERALS. THE CONTRACTOR SHALL IMMEDIATELY NOTIFY THE CITY IF CHANGED CONDITIONS HAVE BEEN EVALUATED.

19. WHERE EXISTING ABANDONED UNDERGROUND UTILITIES ARE ENCOUNTERED AND ARE IN CONFLICT WITH WORK ASSOCIATED WITH THIS CONTRACT, THE CONTRACTOR SHALL CONTACT UTILITY OWNER, CONFIRM ABANDONMENT, THEN REMOVE SUCH UTILITIES AS NEEDED AND DISPOSE OF THE MATERIAL ACCORDING TO THE LATEST OSHA REGULATIONS.

JOB SITE

20. THE CONTRACTOR SHALL ASSUME SOLE AND COMPLETE RESPONSIBILITY FOR THE JOB SITE CONDITIONS, INCLUDING SAFETY OF ALL PERSONS AND PROPERTY, DURING THE COURSE OF CONSTRUCTION AND UNTIL THE WORK IS FORMALLY ACCEPTED BY THE CITY, THIS REQUIREMENT SHALL APPLY CONTINUOUSLY, AND SHALL NOT BE LIMITED TO NORMAL WORKING HOURS. THIS EXCLUDES MAINTENANCE DUE TO WORK BY OTHERS.

21. THE CONTRACTOR SHALL MAINTAIN EXISTING ONSITE AND/OR ADJACENT STORM DRAIN INLETS AFFECTED BY CONSTRUCTION ACCORDING TO THE APPROVED PROJECT SWPPP.

22. THE CONTRACTOR IS RESPONSIBLE FOR KEEPING THE CONSTRUCTION AREA, INCLUDING ADJACENT STREETS AND PROPERTIES, CLEAN AT ALL TIMES. THIS EXCLUDES MAINTENANCE DUE TO WORK BY OTHERS.

23. CONTRACTOR SHALL BE RESPONSIBLE FOR MAINTAINING AN APPROVED COPY OF CONSTRUCTION PLANS AT THE PROJECT SITE DURING CONSTRUCTION. ALL DRAWINGS ARE CONSIDERED TO BE PART OF THE CONTRACT DOCUMENTS.

SURVEY & LAYOUT

24. THE CONTRACTOR SHALL BE RESPONSIBLE FOR THE PROTECTION OF ALL PROPERTY CORNER MARKERS. THE CONTRACTOR SHALL ALSO BE RESPONSIBLE FOR REPLACING ANY SURVEY MONUMENTS THAT ARE DISTURBED DURING CONSTRUCTION. PROPERTY CORNER MARKERS AND SURVEY MONUMENTS DAMAGED BY CONSTRUCTION ACTIVITIES SHALL BE RE-ESTABLISHED BY A PROFESSIONAL SURVEYOR LICENSED IN THE STATE OF CALIFORNIA.

25. THE PROPOSED GRADE IS THE FINAL GRADE AND NOT THE ROUGH GRADE. THE CONTRACTOR SHALL SUBTRACT THE THICKNESS OF THE PAVED SECTION AND/OR LANDSCAPE TOPSOIL SECTION TO ARRIVE AT THE ROUGH GRADE ELEVATION.

26. STRAIGHT GRADE SHALL BE MAINTAINED BETWEEN CONTOUR LINES AND SPOT ELEVATIONS UNLESS OTHERWISE SHOWN ON THE PLANS.

27. CONSTRUCTION STAKING FOR IMPROVEMENTS SHOWN ON THESE PLANS SHALL BE PERFORMED BY A PROFESSIONAL SURVEYOR LICENSED IN THE STATE OF CALIFORNIA.

PUBLIC HEALTH, SAFETY & WELFARE

28. CONTRACTOR SHALL FOLLOW THE CITY APPROVED TRAFFIC CONTROL PLAN. TRAFFIC CONTROL SHALL BE PERFORMED IN ACCORDANCE WITH THE REQUIREMENTS OF THE 2010 EDITION "MANUAL OF UNIFORM TRAFFIC CONTROL DEVICES (MUTCD)" PUBLISHED BY THE CALIFORNIA DEPARTMENT OF TRANSPORTATION. FIRE DEPARTMENT ACCESS SHALL COMPLY WITH THE CITY OF SANTA MONICA AND WATCH MANUAL.

29. WATER SHALL BE PROVIDED ON SITE AND USED TO CONTROL DUST DURING CONSTRUCTION OPERATIONS.

30. ATTENTION IS DIRECTED TO THE SOUND CONTROL REQUIREMENTS AND RESTRICTIONS IN THE PROJECT GENERAL CONDITIONS. SPECIFICALLY, CONTRACTOR SHALL COMPLY WITH ALL LOCAL SOUND CONTROL AND NOISE LEVEL RULES, REGULATIONS AND ORDINANCES, INCLUDING BUT NOT LIMITED TO ALL APPLICABLE PROVISIONS OF CHAPTER 4.12 OF THE SANTA MONICA MUNICIPAL CODE.

31. THE MOST RESTRICTIVE SECTIONS OF THE SANTA MONICA MUNICIPAL CODE GENERALLY REQUIRE THAT CONSTRUCTION NOISE NOT EXCEED 85 DBA MEASURED AT A DISTANCE OF 50 FEET DURING NORMAL WORKING HOURS, WHICH ARE 8 A.M. TO 6 P.M. MONDAY THROUGH FRIDAY, AND 9 A.M. TO 5 P.M. SATURDAY. ANY CONSTRUCTION ACTIVITY, SUCH AS JACK HAMMERING, THAT IS EXPECTED TO GENERATE NOISE LEVELS IN EXCESS OF THE PREVIOUSLY INDICATED RESTRICTIONS SHALL ONLY OCCUR BETWEEN THE HOURS OF 10A.M. AND 3 P.M. MONDAY THROUGH FRIDAY UNLESS APPROVED BY CITY DIRECTOR OF PUBLIC WORKS.

GENERAL NOTES

TREE PROTECTION

32. THE CONTRACTOR SHALL CONTACT COMMUNITY FORESTER AT (310) 458-8974 48-HOURS PRIOR TO TRIMMING ANY INTERFERING TREES OR TRENCHING NEAR THE TREES WHICH CAN DISTURB THE TREE ROOTS.

33. CONTRACTOR SHALL BE FAMILIAR WITH AND HAVE CLEAR UNDERSTANDING OF THE CITY'S PRUNING GUIDELINES AND PRUNING STANDARDS AS ADOPTED BY THE INTERNATIONAL SOCIETY OF ARBORICULTURE.

34. CONTRACTOR SHALL FOLLOW ALL GUIDELINES AS DETAILED IN THE MOST CURRENT ANSI A300 STANDARDS FOR TREE CARE OPERATIONS.
    * ANSI A300 PART 1-2008 VERSION ON THE STANDARDS FOR TREE PRUNING.
    * ANSI STANDARD 2133.1-2004 SAFETY REQUIREMENTS

35. TREES WITHIN THE PUBLIC RIGHT-OF-WAY MAY NOT BE REMOVED FOR ANY REASON EXCEPT FOR THE TREES IDENTIFIED AND APPROVED BY THE CITY FOR REMOVAL OR RELOCATION IN THE TREE DISPOSITION PLAN. THE TREES ARE TO BE PROTECTED FROM INJURY OR DAMAGE DURING CONSTRUCTION. QUESTIONS REGARDING STREET TREES MAY BE DIRECTED TO THE COMMUNITY FORESTER AT (310) 458-8974.

36. THE TYPICAL TREE PROTECTION ZONE (TPZ) SHOULD ENCOMPASS THE CANOPY PLUS AN ADDITIONAL RADIAL WIDTH OF TEN FEET (10').

37. REMOVAL OF HARDSCAPE AND/OR EXCAVATION WITHIN THE TPZ SHALL BE DONE MANUALLY.

38. IN THE EVENT ROOT PRUNING IS REQUIRED TO ACCOMMODATE GRADE CHANGES OR THE INSTALLATION OF HARDSCAPE FEATURES, THE ROOT PRUNING PROCEDURES SHALL BE DIRECTED BY A CERTIFIED ARBORIST.

MISCELLANEOUS

39. AT LEAST 72 HOURS SHALL ELAPSE FROM THE TIME CONCRETE IS PLACED BEFORE VEHICULAR TRAFFIC IS PERMITTED TO TRAVEL ON IT, UNLESS OTHERWISE APPROVED BY THE ENGINEER.

40. WHERE EXISTING PAVEMENT OR SUBGRADE IS FOUND TO BE UNSTABLE, THE CONTRACTOR SHALL REMOVE AND REPLACE THE TOP ~~3 FEET~~ 8" OF SUBGRADE WITH CRUSHED MISCELLANEOUS BASE (CMB) AND COMPACT TO 95% OF MAX. DRY DENSITY OBTAINABLE AS MEASURED BY ASTM D-1157. IF SHALLOW UTILITIES PREVENT REMOVAL OF ~~3 FEET~~ 8" OF SUBGRADE SOIL, A WOVEN GEOFABRIC SHALL BE USED TO PROVIDE STRENGTH ~~TO THE SUBGRADE~~ OR AS APPROVED BY THE ENGINEER. DRFI-00001

41. EXPANSION JOINTS PERPENDICULAR TO THE CURB SHALL BE INSTALLED IN COMBINED CURB AND GUTTER AT THE BCR, ECR, BC, EC AND AT LOCATIONS WHERE THE CURB JOINS EXISTING STRUCTURES. LONGITUDINAL EXPANSION JOINTS SHALL BE INSTALLED WHERE THE CURB BUTTS AGAINST ANY EXISTING STRUCTURE.

42. SAWING OF JOINTS SHALL BEGIN AS SOON AS THE CONCRETE HAS SUFFICIENTLY HARDENED TO PERMIT SAWING WITHOUT RAVELING, BUT NOT EXCEEDING TWELVE (12) HOURS AFTER PLACEMENT OF CONCRETE. PLACEMENT OF CONCRETE SHALL BE SCHEDULED TO BEGIN AND FINISH TO ALLOW SAWING OF JOINTS AS PREVIOUSLY STATED.

43. THE EXACT LOCATIONS AND LIMITS FOR THE REMOVAL AND CONSTRUCTION OF CONCRETE AND RUBBER SIDEWALKS IS TO THE NEAREST SCORE LINE.

44. CONTRACTOR SHALL BE RESPONSIBLE FOR ANY DAMAGE OR EXCESSIVE WEAR NEAR TO ROADS OR ADJACENT PUBLIC OR PRIVATE PROPERTY CAUSED BY CONSTRUCTION-RELATED WORK, AND SHALL BE RESPONSIBLE FOR ANY OTHER WORK REQUIRED TO PREVENT SUCH DAMAGE. ALL EXISTING STREET IMPROVEMENTS OUTSIDE OF THE PROJECT'S LIMIT OF WORK DAMAGED DURING CONSTRUCTION SHALL BE ~~PREPARED~~ AT THE CONTRACTORS EXPENSE, AS DIRECTED BY THE ENGINEER, AND TO THE SATISFACTION OF THE OWNER. THE CONTRACTOR SHALL REPLACE ALL EXISTING IMPROVEMENTS DAMAGED DURING CONSTRUCTION TO THE SAME OR BETTER CONDITION.

Repaired (DRFI-00005) (3RFI-00018)

45. ALL GRADING OPERATIONS SHALL BE DONE IN ACCORDANCE WITH THE RECOMMENDATIONS OF THE PROJECT GEOTECHNICAL INVESTIGATION AND IF ANY UNFAVORABLE CONDITIONS ARE ENCOUNTERED AT ANY TIME DURING GRADING OPERATIONS THE CONTRACTOR SHALL NOTIFY THE GEOTECHNICAL ENGINEER.

46. ALL EXCAVATIONS 5' IN DEPTH OR GREATER SHALL BE SLOPED OR SHORED FOR OSHA REGULATIONS.

GENERAL NOTES

MISCELLANEOUS (CONTINUED)

47. TRAFFIC PLATES ON EXCAVATED AREAS SHALL BE SKID RESISTANT, WITH MINIMUM COEFFICIENT OF FRICTION EQUIVALENT TO 0.35 PER CALIFORNIA TEST METHOD 342. STEEL PLATES BRIDGING SHALL BE STEEL OF MINIMUM A36 GRADE DESIGNED FOR H520-44 TRUCK LOADING PER CALTRANS BRIDGE DESIGN SPECIFICATION MANUAL.

48. THE CONTRACTOR SHALL SUPPLY ALL EQUIPMENT, LABOR, AND MATERIALS NECESSARY TO PERFORM THE WORK SHOWN ON THE PLAN. CONTRACTOR SHALL USE ADEQUATE NUMBERS OF SKILLED WORKMEN WHO ARE THOROUGHLY TRAINED AND EXPERIENCED IN THE NECESSARY CRAFTS AND WHO ARE COMPLETELY FAMILIAR WITH THE SPECIFIED REQUIREMENTS AND THE METHODS NEEDED PRIOR TO PERFORMANCE OF WORK.

49. CONTRACTOR SHALL COORDINATE ALL WORK, INCLUDING SUBCONTRACTORS WORK, SO AS TO ELIMINATE CONFLICTS AND WORK TOWARDS THE GENERAL GOOD AND COMPLETION OF THE ENTIRE PROJECT WITHIN THE SPECIFIED PERIOD.

DESIGN & CONSTRUCTION STANDARDS:

50. THE FOLLOWING STANDARD PLANS AND SPECIFICATIONS ARE APPLICABLE TO THIS PROJECT:
    - A. CITY OF SANTA MONICA STANDARD PLANS.
    - B. STANDARD SPECIFICATION FOR PUBLIC WORKS CONSTRUCTION (GREENBOOK), 2009 EDITION AND SUPPLEMENTS.
    - C. STANDARD PLANS FOR PUBLIC WORKS CONSTRUCTION (SPPWC), 2009 EDITION AND SUPPLEMENTS.
    - D. SECTION 41 & 86 OF THE CALIFORNIA DEPARTMENT OF TRANSPORTATION (CALTRANS) STANDARD SPECIFICATIONS, 2010 EDITION AND SUPPLEMENTS, FOR ELECTRICAL FACILITIES AND TRAFFIC STRIPING AND MARKINGS.
    - E. THE CALIFORNIA DEPARTMENT OF TRANSPORTATION (CALTRANS) STANDARD PLANS, LATEST 2010 EDITION AND SUPPLEMENTS, FOR TRAFFIC STRIPING AND MARKINGS.
    - F. THE MANUAL OF UNIFORM TRAFFIC CONTROL DEVICES (MUTCD) CALIFORNIA ~~2010~~ 2006 EDITION WITH LATEST SUPPLEMENTS. (3RFI 20063)
    - G. LA COUNTY DEPARTMENT OF PUBLIC WORKS "GRAY BOOK"

Note 36.A "MULCH THE ENTIRE AREA OF THE TPZ IN AN EFFORT TO IMPROVE THE GROWING ENVIRONMENT FOR THE ROOTS. DURING CONSTRUCTION PHASE MAINTAIN A FOUR TO SIX INCH LAYER OF CHIP MULCH OVER THE SOIL SURFACE TO REDUCE SOIL COMPACTION IMPROVE AERATION, ENHANCE MOISTURE, RETENTION AND REDUCE TEMPERATURE EXTREMES. MULCH GENERALLY CONSISTS OF SHREDDED LEAVES OR BARK, PINE STRAW, PEAT MOSS, WOOD CHIPS OR COMPOSTED GREENWASTE.

Note 36.B. FENCE THE TPZ WITH A SIX FOOT HIGH CHAIN LINK FENCE TO PREVENT WOUNDS TO THE TREE AND SOIL COMPACTION WITHIN THE ROOT ZONE, POST THE FENCE WITH A SIGN STATING: "TREE PROTECTION ZONE - KEEP OUT". "
(DRFI-00005)
(3RFI-00018)

SRJV
AUG 24 2012
ISSUED FOR CONSTRUCTION

51. UNLESS OTHERWISE NOTED, FIBER OPTIC AND TRAFFIC SIGNAL WORK SHALL BE IN ACCORDANCE WITH THE CITY OF SANTA MONICA'S PLANNING AND COMMUNITY DEVELOPMENT DEPARTMENT OF TRANSPORTATION ENGINEERING AND MANAGEMENT DIVISION'S TRAFFIC SIGNAL AND FIBER OPTIC SPECIFICATIONS
(DRFI 10161)
(3RFI 20047)

REV	DATE	BY	APP	REG NO	EXPIRES	SEAL HOLDER	DESCRIPTION
0	3/1/12	FH	DJA	C53031	06-30-13	DARREN J. ADRIAN	APPROVED FOR CONSTRUCTION

REVISION DATES (DESIGN STAGE ONLY)

DESIGNED BY: E. REGUEIRO
DRAWN BY: J. GATZA
CHECKED BY: F. HOFFMANN
IN CHARGE: D. ADRIAN
DATE: 3/1/12

REGISTERED PROFESSIONAL ENGINEER — DARREN J. ADRIAN — No. C53031 — Exp. 06-30-13 — CIVIL — STATE OF CALIFORNIA

Exposition Metro Line Construction Authority
Expo
11-30-12
Exposition Construction Authority
Approved for Construction Drawings - AFC

SKANSKA RADOS
444 South Flower Street
Suite 2200
Los Angeles, CA 90071
TEL (213) 443-7463
FAX (213) 362-9481

PARSONS BRINCKERHOFF
CURRENT STATUS
Kimley-Horn and Associates, Inc.
835 WILSHIRE BOULEVARD SUITE 320 LOS ANGELES, CA 90017 TEL: (213) 489-1276

EXPOSITION LRT PROJECT- PHASE 2
GENERAL
STREET IMPROVEMENT
GENERAL NOTES
SHEET 1 OF 2

CONTRACT NO: XP8902-002
DRAWING NO: G-301
REV: 0
SCALE: NO SCALE
SHEET NO

SCALES — HORIZ SCALE: NO SCALE — VERT SCALE: NO SCALE
SHEET
INDEX NUMBER

rodriguezd 5:05:23 PM 3/1/2012
Plot Driver=EXPO2-Full-BW-pdf.plt
Pentable=EXPO2-PENTABLE.tbl
C:\Expo 2\General\expo2-g-301.plg

City of Santa Monica
Department of Public Works
1437 4th Street, Suite 300 Santa Monica, CA 90401
TEL. (310)458-8721 FAX. (310)393-4425
e-mail : smengineering@smgov.net

CITY DRAWING NO.
SHEET NO.: SHT#... OF... TOT#
DATE: 3-8 2012
APPROVED BY: LEON E. SWAIN, P.E., CITY ENGINEER
REFERENCE:
SUBMITTED BY:
REVIEWED: DATE: 3-8 2012
CITY ENGINEERING
REVISIONS — NO. | DATE | BY | DESCRIPTION | APPROVED

C:\Expo 2\General\expo2-g-301.plg
Plotted by: rodriguezd 3/1/2012

Sheet Version 2.01

EXPO 2 CONSTRUCTION - CITY'S EMERGENCY AFTER HOURS AND WEEKEND CONTACT LIST

ITEM	AGENCY	PHONE NUMBER
EMERGENCY & FIRST RESPONDERS	SMPD AND SMFD	911
UNDERGROUND SERVICE ALERT	DIGALERT	811 / 800 277 2600
CITY FACILITIES/SERVICES - AFTER HOURS AND WEEKEND PHONE NO.	DISPATCH AT ARCADIA WTP	(310) 826 6721
UTILITY LOCATOR FOR THE CITY OF SANTA MONICA	GLENN CLAYPOOL	(310) 458 2201 EX 5707
POLICE WATCH COMMANDER	SMPD	(310) 458 8427

EXPO 2 CONSTRUCTION - CITY'S EMERGENCY DAYTIME CONTACT LIST

ROLE	NAME	MOBILE PHONE	OFFICE PHONE
CONSTRUCTION COORDINATION			
CITY CONSTRUCTION MANAGER	ALEX NAZARCHUK	(310) 420 7820	(310) 458 8736
CITY SUBSTITUTE CONSTRUCTION MANAGER (IF ALEX ON VACATION)	BILL ZEIN	(310) 678 5873	(310) 458 8726
CITY'S PERMIT COORDINATOR (DESIGN ONLY)	ANTONIO SHAIBANI		(310) 458 8721
TRANSPORTATION ENGINEER	JAY DINKINS	(310) 570 7380	(310) 458 8963
CITY PROJECT SUPPORT ASSISTANT / PERMIT COORDINATOR	YVETTE PIERRE		(310) 458 2201 EX 5671
FIELD INSPECTIONS			
CITY'S SR. PUBLIC WORKS INSPECTOR	CHUCK MENG	(310) 420 6829	
CITY'S UTILITY INSPECTOR (CHUCK'S BACK UP AND FOR POTHOLING WORK)	JAMES CRAMPTON	(310) 350 9738	
CITY OWNED UTILITIES			
UTILITY LOCATION	GLENN CLAYPOOL	(310) 863 5918	(310) 458 2201 EX 5707
WATER, SEWER AND SD - AST. MANAGER	GARY WELLING		(310) 458 8531
WATER - WATER SUPERVISOR	JAIME GOMEZ	(310) 629 9678	
SEWER / SD - SEWER SUPERVISOR	DANNY GOMEZ	(310) 863 0375	
TRAFFIC SIGNAL - SUPERVISOR	MIKE MORGAN	(310) 710 0372	(310) 458 8520
LEAD TRAFFIC SIGNAL TECHNICIAN	KEN WARD	(310) 710 0402	
TRAFFIC SIGNAL TECHNICIAN	DAVE COOK	(310) 710 3337	
TRAFFIC SIGNAL TECHNICIAN	ED ESCARCEGA	(310) 570 3078	
TRAFFIC SIGNAGE	SAM MORRISSEY	(619) 917 7478	(310) 458 8955
STREET LIGHTING	MANUEL PINA		(310) 458 8529
FIBER LINES - ISD	DAN SUZEWITZ	(310) 864 6874	(310) 458 2201 EX 5211
FIBER LINES - ISD (BACK UP)	~~JUHO CHOI~~ ROY POGUE		(310) 458 2201 EX 5303
TRASH COLLECTION AND ENCLOSURES	KIM BRAUN		(310) 458 2223
TREES AND ROOTS	WALT WARRINER	(310) 925 9963	
PUBLIC LANDSCAPE	DARRELL BAKER		(310) 458 8974
NEWSPAPER RACKS	ERIKA BUSTAMANTE		(310) 458 8737
BIG BLUE BUS	ERNIE CRESPO		(310) 458 5840
NON EMERGENCY POLICE AND FIRE	SMPD		(310) 458 8491
POLICE FRONT DESK	SMPD		(310) 458 8427
POLICE WATCH COMMANDER	NANCY JOHNSON		(310) 458 8669
FIRE PREVENTION	MARGARITA VERDUZCO		(310) 458 2226
PARKING ENFORCEMENT			
PR AND NEWSPAPER/TV RELATED CITY REQUESTS	KATE VERNAZ		(310) 458 2201 EXT 5051
DEPUTY CITY MANAGER			

DRFI-10072
3RFI-20044

BASIS OF BEARING:

THE BASIS OF BEARINGS FOR THIS SURVEY IS N85°25'40"W BETWEEN NGS STATIONS EW4014 AND EW9587 BASED UPON THE NORTH AMERICAN DATUM OF 1983 (NAD83 1995.00 HPGN), CALIFORNIA STATE PLANE COORDINATE SYSTEM OF 1983 (CCS83), ZONE 5, BASED LOCALLY BETWEEN:

EW9587: UNIVERSITY OF SOUTHERN CALIFORNIA "CHILDS WAY"
EW4014: NATIONAL GEODETIC SURVEY P 99 RESET

HORIZONTAL DATUM:

ALL COORDINATE VALUES WERE CALCULATED FROM THE SURVEYED RELATIONSHIP BETWEEN THE GROUND STATIONS LISTED ABOVE.

ALL DISTANCES SHOWN HEREON ARE GRID DISTANCES. TO OBTAIN GROUND DISTANCE DIVIDE THE GRID VALUE BY THE COMBINATION FACTOR 0.99999943.

VERTICAL DATUM:

THE NORTH AMERICAN VERTICAL DATUM OF 1988 (NAVD 88, JUNE 1995 ADJUSTMENT) WAS USED FOR BENCHMARKS. ALL NAVD88 VALUES WERE OBTAINED FROMTHE NATIONAL GEODETIC SURVEY (NGS). THE PRIMARY BENCHMARKS USED FOR THIS PROJECT ARE:

AA4323 - ELEVATION = 135.97' (LA 10 R3.07)
DY1251 - ELEVATION = 10.88' (23 W)
EW4014 - ELEVATION = 31.08' (P99 RESET)
AA4305 - ELEVATION = 89.33' (13 02508)
AA4310 - ELEVATION = 113.39' (13 26950)

SRJV
AUG 24 2012
ISSUED FOR CONSTRUCTION

REV	DATE	BY	APP	REG NO	EXPIRES	SEAL HOLDER	DESCRIPTION
0	3/1/12	FH	DJA	C53031	06-30-13	DARREN J. ADRIAN	APPROVED FOR CONSTRUCTION

REVISION DATES (DESIGN STAGE ONLY)

DESIGNED BY E. REGUEIRO
DRAWN BY J. GATZA
CHECKED BY F. HOFFMANN
IN CHARGE D. ADRIAN
DATE 3/1/12

REGISTERED PROFESSIONAL ENGINEER DARREN J. ADRIAN No. C53031 Exp. 06-30-13 CIVIL STATE OF CALIFORNIA

Exposition Metro Line Construction Authority
Expo
Exposition Construction Authority
Approved for Construction Drawings - AFC
EXPO SKANSKA RADOS
444 South Flower Street
Suite 2200
Los Angeles, CA 90071
TEL (213) 443-7463
FAX (213) 362-9481
PARSONS BRINCKERHOFF
Kimley-Horn and Associates, Inc.
CURRENT STATUS

EXPOSITION LRT PROJECT- PHASE 2
GENERAL
STREET IMPROVEMENT
GENERAL NOTES
SHEET 2 OF 2

CONTRACT NO XP8902-002
DRAWING NO G-302
REV 0
SCALE NO SCALE
SHEET NO

rodriguezd 5:05:24 PM 3/1/2012
Plot Driver=EXPO2-Full-BW-pdf.plt
Pentable=EXPO2-PENTABLE.tbl
C:\Expo 2\General\expo2-g-302.plg

SCALES: HORIZ SCALE: NO SCALE; VERT SCALE: NO SCALE
SHEET
INDEX NUMBER

REFERENCE:
SUBMITTED BY:
CITY DRAWING NO.
SHEET NO: SHT# ... OF ... TOT#
DATE: 3-8 20 12
APPROVED BY: LEON E. SWAIN, P.E., CITY ENGINEER
ENGINEERING
REVIEWED: DATE: 20
REVIEWED: DATE: 20
REVIEWED: DATE: 3-8 20 12
CITY

REVISIONS

NO.	DATE	BY	DESCRIPTION	APPROVED

City of Santa Monica
Department of Public Works
1437 4th Street, Suite 300 Santa Monica, CA 90401
TEL. (310)458-8721 FAX. (310)393-4425
e-mail : smengineering@smgov.net

Plotted by: rodriguezd 3/1/2012 C:\Expo 2\General\expo2-g-302.plg

Sheet Version 2.01

MISCELLANEOUS ABBREVIATIONS

&	AND
@	AT
A/R	AS REQUIRED
AB	AGGREGATE BASE
ABAN	ABANDON
ABND	ABANDONED
ABS	ACRYLONITRILE-BUTADIENE-STYRENE
ABUT	ABUTMENT
AC	ASPHALT CONCRETE OR ASBESTOS CEMENT
ACC	ASPHALT CEMENT CONDUIT
ACD	ASPHALTIC CONCRETE DUCT
ACL	AUXILIARY CONTROL LINE
ACP	ASBESTOS CEMENT PIPE
ACWS	ASPHALT CONCRETE WEARING SURFACE
AD	AREA DRAIN
ADA	AMERICANS WITH DISABILITIES ACT
ADAAG	AMERICANS WITH DISABILITIES ACT ACCESSIBILITY GUIDELINES
AGB	ALLEY GRATING BASIN
AGGR	AGGREGATE
AHD	AHEAD
AL	ALUMINUM
ALIGN	ALIGNMENT
ALT	ALTERNATE
AMER STD	AMERICAN STANDARD
AP	ANGLE POINT
APP	APPROVED (REF)
APPROX	APPROXIMATELY, APPROXIMATE
APPV	APPROVED
APWA	AMERICAN PUBLIC WORKS ASSOCIATION
AS	AGGREGATE SUB-BASE
ASB	ASBESTOS
ASPH	ASPHALT
ATSAC	AUTOMATED TRAFFIC SURVEILLANCE AND CONTROL SYSTEM
AVE	AVENUE
AWG	AMERICAN WIRE GAGE (NONFERROUS WIRE)
B TO B	BACK TO BACK
B/W	BACK OF WALL
BB	BEGINNING OF BRIDGE, BILLBOARD
BC	BEGIN CURVE
BCOP	BARE COPPER
BCR	BEGIN CURB RETURN
BD	BRIDGE DRAIN
BDRY	BOUNDARY
BEG	BEGIN OR BEGINNING
BF	BOTTOM FACE, BOTTOM OF FOOTING
BFP	BACKFLOW PREVENTER
BI	BRIDGE INLET
BIT	BITUMINOUS
BK	BACK
BL	BASELINE, BUILDING LINE OR LEFT TRACK-LINE B
BLDG	BUILDING
BLS	BLUE LIGHT STATION
BLVD	BOULEVARD
BM	BENCH MARK
BO	BLOW-OFF
BOC	BOTTOM OF CURB
BOP	BOTTOM OF PIPE
BOS	BOTTOM OF SLOPE
BOW	BACK OF SIDEWALK
BP	BEGIN PLATFORM
B-PC	SCHEDULE B - PLASTIC CONDUIT
BRDG	BRIDGE
BRG	BEARING
BRK	BRICK
BRS	BLAST RELIEF SHAFT
BS	BELL AND SPIGOT
BSJ	BELL AND SPIGOT JOINT
BSMT	BASEMENT
BUR CA	BURIED CABLE
BVC	BEGINNING OF VERTICAL CURVE
BW	BOTTOM OF WALL OR BACK OF WALK
℄	CENTERLINE
C	CURB OR CONDUIT
℄ TO ℄	CENTERLINE TO CENTERLINE
C&G	CURB AND GUTTER
C/C	CENTER TO CENTER
C/S	COMMUNICATIONS/SIGNALS
CA	CABLE OR COMPRESSED AIR
CAB	CRUSHED AGGREGATE BASE
CAP	CORRUGATED ALUMINUM PIPE
CB	CATCH BASIN, CONSTRUCTION BASELINE
CBD	CENTRAL BUSINESS DISTRICT
CBP	CATCH BASIN CONNECTION PIPE
CBR	CALIFORNIA BEARING RATIO
CC-B	CONCRETE CONDUIT-TYPE B
CC-C	CONCRETE CONDUIT-TYPE C
CCR	CALIFORNIA CODE OF REGULATIONS
CCTV	CLOSED CIRCUIT TV
CD	CURB DRAIN
CE	CONCRETE ENCASED
CEFB	CITY ENGINEER FIELD BOOK
CF	CURB FACE OR CUBIC FOOT
CFR	CODE OF FEDERAL REGULATIONS
CFS	CUBIC FEET PER SECOND
CGB	CURBSIDE GRATING BASIN
CGS	CENTER OF GRAVITY, STRAND
CHEM	CHEMICAL
CI	CAST IRON OR CURB INLET
CICLP, CIP(CL)	CAST-IRON CEMENT LINED PIPE
CIDH	CAST-IN-DRILLED-HOLE
CIP	CAST IRON PIPE OR CAST-IN-PLACE
CIPP	CAST-IN PLACE PIPE
CIRCUM	CIRCUMFERENCE
CISP(ES)	CAST IRON SOIL PIPE (EXTRA STRENGTH)
CJ	CONSTRUCTION JOINT
CL	CLEARANCE, CURB LINE, CLASS
CLF	CHAIN LINK FENCE
CLG	CEILING
CLR	CLEARANCE OR CLEAR
CLSM	CONTROLLED LOW STRENGTH MATERIAL
CMB	CRUSHED MISCELLANEOUS BASE
CMC & L	CEMENT MORTAR-COATED AND ~~COATED~~ LINED (DRFI-10072) (3RFI-20044)
CMP	CORRUGATED METAL PIPE
CO	CLEANOUT, COUNTY, OR COMPANY
COL	COLUMN
COMM	COMMUNICATION
CONC	CONCRETE
CONC BL	CONCRETE BLOCK
COND	CONDUIT
CONF	CONFERENCE
CONN	CONNECT, CONNECTION, OR CONNECTOR
CONN	CONNECTION
CONST	CONSTRUCT OR CONSTRUCTION
CONT	CONTINUED, CONTINUOUS, OR CONTINUATION
COORD	COORDINATE
COP	COPPER
COR	CORNER
CORR	CORRUGATE OR CORRUGATED
CP	CONCRETE PIPE OR CEMENT PIPE
CPC	CORRUGATED PLASTIC CONDUIT
C-PC	SCHEDULE C - PLASTIC CONDUIT
CSC	CONC STEEL CYLINDER
CSG	CASING
CSP	CORRUGATED STEEL PIPE
CSW	CONCRETE SIDEWALK
CTA	CENTRAL TANGENT ANGLE
CTB	CEMENT TREATED BASE
CU FT	CUBIC FOOT
CU IN	CUBIC INCH
CU YD	CUBIC YARD
CULV	CULVERT
CV	CHECK VALVE
CWD	CREOSOTED WOOD DUCT
CWP	CONSTRUCTION WORK PLAN
CY	CUBIC YARD
D	LOAD OF PIPE
D, d	DEPTH
D, DU, DCT	DUCT, DUCTBANK
DB	DESIGN BUILDER
dB	DECIBELS
DBE	DISADVANTAGED BUSINESS ENTERPRISE
DBL	DOUBLE
DEF	DEFLECTION
DEG	DEGREES
DEPT	DEPARTMENT
DESC	DESCRIPTION
DET	DETAIL
DF	DIRECT FIXATION, DOUGLAS FIR
DG	DIESEL GAS OR DRY GAS, DECOMPOSED GRANITE
DI	DUCTILE IRON, DROP INLET
DIA	DIAMETER
DIAG	DIAGRAM
DIM	DIMENSION
DIP(L)	DUCTILE IRON PIPE (LINED)
DIST	DISTRICT OR DISTANCE
DL	DEAD LOAD
DLC	DETECTOR LOOP CABLE
DMBB	DOUBLE METAL BEAM BARRIER
DMD	DIAMOND
DMH	DRAINAGE MAINTENANCE HOLE
DML	DEMOLITION
DN	DOWN
DOT	DEPARTMENT OF TRANSPORTATION
DT	DRAIN TILE
DW	DOMESTIC WATER
DWG	DRAWING
DWL	DOWEL
DWLG	DWELLING
DWY	DRIVEWAY
DWY APR	DRIVEWAY APPROACH
E	EAST, ELECTRIC
E/E	EAST OF EAST RIGHT-OF-WAY LINE
E/O	EAST OF
E/W	EAST OF WEST RIGHT-OF-WAY LINE
EA	EACH
EB	EASTBOUND, END OF BRIDGE
EC	END CURVE OR END CURB
ECR	END CURB RETURN
EF	EACH FACE
EG	EDGE OF GUTTER
EGL	ENERGY GRADE LINE
EHH	ELECTRICAL HANDHOLE
EL	ELEVATION
ELC	ELECTROLIER LIGHTING CONDUIT
ELEC	ELECTRIC OR ELECTRICAL
ELEV	ELEVATOR OR ELEVATION
ELT	EXTRA LONG TON
EMB	EMBANKMENT
EMH	ELECTRICAL MAINTENANCE HOLE
ENGR	ENGINEER, ENGINEERING
EOR	END OF ROAD
EP	EDGE OF PAVEMENT OR END PLATFORM
EQ	EQUAL, EQUATION OR EQUALITY
ES	EXTRA STRENGTH, EDGE OF SHOULDER
ESMT	EASEMENT
E'STERLY	EASTERLY
ET	END TRACK
ETB	EMULSION-TREATED BASE
ETC	ELETROLYSIS TEST STATION, ET CETERA
E'TERLY	EASTERLY
ETS	EMERGENCY TRIP STATION
EVC	END OF VERTICAL CURVE
EW	EACH WAY
EX OR EXIST	EXISTING
EXC	EXCAVATION
EXP	EXPANSION
EXP JT	EXPANSION JOINT
EXT	EXTERIOR
F	FAHRENHEIT, FIBER
F TO F	FACE TO FACE
F&C	FRAME AND COVER
F&I	FURNISH AND INSTALL
FA	FIRE ALARM
FAB	FABRICATE
FAC	FIRE ALARM CONDUIT
FAI	FRESH AIR INTAKE
FAS	FLASHING ARROW SIGN
FB	FIRE ALARM BOX
FBM	FOOT BOARD MEASUREMENT
FBP	FUTURE BEGIN PLATFORM
FC	FIBER CONDUIT OR FIRE CONNECTION
FD	FIBER DUCT, FLOOR DRAIN OR FIRE DEPARTMENT
FDN	FOUNDATION
FE	FLANGED END
FED SPEC	FEDERAL SPECIFICATION
FEP	FUTURE END PLATFORM
FF	FINISHED FLOOR OR FAR FACE
FFE	FINISH FLOOR ELEVATION
FG	FROG GAUGE PLATE OR FINISH GRADE
FH	FIRE HYDRANT
FIN	FINISH
FL	FLOW LINE, FUEL
FLG	FLANGE
FLP	FLOW LINE PIPE
FLR	FLOOR
FO	FIBER OPTIC
FP	FIRE PROTECTION
FPS	FEET PER SECOND
FR	FRAME
FS	FIRE SERVICE, FINISHED SURFACE, OR FAR SIDE
FT	FOOT OR FEET
FTA	FULLY TRAFFIC ACTUATED
FTG	FOOTING
FT-LB	FOOT-POUND
FW	FACE OF WALL
FWL	FIRE WATER LINE
FWY	FREEWAY

SRJV
DEC 03 2012
ISSUED FOR CONSTRUCTION

REV	DATE	BY	APP	REG NO	EXPIRES	SEAL HOLDER	DESCRIPTION
0	7/23/12	FH	DJA	C53031	06-30-13	DARREN J. ADRIAN	APPROVED FOR CONSTRUCTION

REVISION DATES
DESIGN STAGE ONLY

DESIGNED BY R. BROWNE
DRAWN BY R. BROWNE
CHECKED BY F. HOFFMANN
IN CHARGE D. ADRIAN
DATE 7/23/12

REGISTERED PROFESSIONAL ENGINEER
DARREN J. ADRIAN
No. C53031
Exp. 06-30-13
CIVIL
STATE OF CALIFORNIA

Exposition Metro Line Construction Authority
Expo
11-30-12
Exposition Construction Authority
Approved for Construction Drawings - AFC

EXPO SKANSKA RADOS
444 South Flower Street
Suite 2200
Los Angeles, CA 90071
TEL (213) 443-7463
FAX (213) 362-9481

PARSONS BRINCKERHOFF
Kimley-Horn and Associates, Inc.
833 WILSHIRE BOULEVARD SUITE 320 LOS ANGELES, CA 90017 TEL: (213) 488-1270
CURRENT STATUS

EXPOSITION LRT PROJECT- PHASE 2
GENERAL
STREET IMPROVEMENT
MISCELLANEOUS ABBREVIATIONS
SHEET 1 OF 3

CONTRACT NO XP8902-002
DRAWING NO G-3A-303
REV 0
SCALE NO SCALE
SHEET NO 6 OF 134

justin.gatza 5:47:45 PM 7/19/2012
Plot Driver=EXPO2-PDF-Full-BW.plt
Pentable=EXPO2-PENTABLE.tbl
K:\LDT_RDWY\094617000 - Expo Ph 2\Working\04 BATCH PLOT\Temp Export Files from PW\Roadway\expo2-g-3a-303.plg

SCALES HORIZ SCALE: NO SCALE VERT SCALE: NO SCALE
SHEET
INDEX NUMBER

Sheet Version 2.01

CITY DRAWING NO. 9301
SHEET NO. 6 OF 134
DATE: 08-24 2012
SUBMITTED BY: Dave DeVinck
APPROVED BY: LEON E. SWIN, P.E., CITY ENGINEER
REFERENCE:
REVIEWED: DATE: 20
REVIEWED: DATE: 20
REVIEWED: DATE: 08-24 2012
CITY ENGINEERING

NO.	DATE	BY	DESCRIPTION	APPROVED
			REVISIONS	

City of Santa Monica
Department of Public Works
1437 4th Street, Suite 300 Santa Monica, CA 90401
TEL. (310)458-8721 FAX. (310)393-4425
e-mail : smengineering@smgov.net

Plotted by: justin.gatza 7/19/2012 K:\LDT_RDWY\094617000 - Expo Ph 2\Working\04 BATCH PLOT\Temp Export Files from PW\Roadway\expo2-g-3a-303.plg

MISCELLANEOUS ABBREVIATIONS

G	GAS OR GAS LINE
GA	GAUGE (GAGE)
GAL(S)	GALLON(S)
GALV	GALVANIZE OR GALVANIZED
GASO	GASOLINE
GB	GRADE BREAK
GC	GRADE CHANGE
GDWY	GUIDEWAY
GL	GROUND LINE OR GRADE LINE
GM	GAS METER
GND	GROUND
GP	GUY POLE, GENERAL PACKAGE, GAUGE PLATE OR GRADING
GR	GRADE, GROUND OR GUARD RAIL PLATE
GRS	GALVANIZED RIGID STEEL
GRTG	GRATING
GSC	GALVANIZED STEEL CONDUIT
GSP	GALVANIZED STEEL PIPE
GUY	POWER POLE ANCHOR
GV	GATE VALVE
GW	GUY WIRE
H	HIGH OR HEIGHT
HAP	HORIZONTAL ANGLE POINT
HB	HOSE BIB
HC	HANDICAP OR SANITARY SEWER HOUSE CONNECTION
HDPE	HIGH DENSITY POLYETHYLENE
HDWL	HEADWALL
HGL	HYDRAULIC GRADE LINE
HH	HANDHOLE
HMWPE	HIGH MOLECULAR WEIGHT POLYETHYLENE
HORIZ	HORIZONTAL
HOV	HIGH OCCUPANCY VEHICLE
HP	HIGH PRESSURE, HORSE POWER, HEEL PLATE OR HIGH POINT
HPG	HIGH PRESSURE GAS
HPS	HIGH PRESSURE SODIUM (LIGHT)
HR	HEADROOM OR HOUR
HS	HIGH STRENGTH STEEL ASTM 432
HWY	HIGHWAY
HYDR	HYDRAULIC
ID	INSIDE DIAMETER
IJ	INSULATED JOINT
ILD	INLINE DRAIN
IMPVT	IMPROVEMENT
IN	INCH
INCL	INCLUDING
INSP	INSPECTION
INV	INVERT
IP	IRON PIPE
IPW	INSPECTOR OF PUBLIC WORKS
JB	JUNCTION BOX
JC	JUNCTION CHAMBER
JCT	JUNCTION
JS	JUNCTION STRUCTURE
JT	JOINT
K	KIP OR KIPS
KF	KIP-FOOT
KLF	KIPS PER LINEAR FOOT
KSF	KIPS PER SQUARE FOOT
KV	KILOVOLT
L	LINE, LINING, OR LENGTH
LA	CITY OF LOS ANGELES
LAB	LABORATORY
LAT	LATERAL
LBS OR #	POUND(S)
LD	LEAD, LOCAL DEPRESSION
LF	LINEAR FOOT (FEET)
LG	LONG OR LENGTH
LGT	LIGHT (REF)
LH	LAMP HOLE, LEFT-HAND
LIN FT	LINEAL FOOT (FEET)
LJ	LEADED JOINT
LL	LIVE LOAD
LNS	LOCAL NETWORK SERVICE
LOC	LOCATE, LOCATED, OR LOCATION
LOL	LAYOUT LINE
LONG	LONGITUDINAL
LP	LOW PRESSURE OR LOW POINT, LAMP POST
LPS	LOW PRESSURE SODIUM (LIGHT)
LRT	LIGHT RAIL TRANSIT
LS	LUMP SUM
LT	LEFT
LTG	LIGHTING
LTS	LIME TREATED SOIL
M	MAIN, MEDIUM
MA	MAST ARM
MACH	MACHINE OR MACHINERY
MAG	MAGNESIUM OR MAGNETIC
MAINT	MAINTENANCE
MAX	MAXIMUM
MB	METAL BEAM
MBB	METAL BEAM BARRIER
MBE	MINORITY BUSINESS ENTERPRISE
MBGR	METAL BEAM GUARD RAILING
MBL	METRO BLUE LINE
MCD	MULTIPLE CONCRETE DUCT, MULTIPLE CLAY DUCT
MCR	MIDDLE OF CURB RETURN
MCWD	MULTIPLE CREOSOTED WOOD DUCTS
MEAS	MEASURE
MECH	MECHANICAL
MED	MEDIAN
MGL	METRO GREEN LINE
MH	MAINTENANCE HOLE, MANHOLE
MIL	SPEC MILITARY SPECIFICATION
MIN	MINIMUM, MINUTES
MISC	MISCELLANEOUS
MJ	MECHANICAL JOINT
ML	MORTAR LINED
MOC	MIDDLE OF CURVE
MOD	MODIFIED, MODIFY
MON	MONUMENT
MP	MEDIUM PRESSURE
MPH	MILES PER HOUR
MRL	METRO RED LINE
MSM	MANDATORY SUBCONTRACTING MINIMUM
MTC	MULTI-TILE CONDUIT
MTD	MULTI-TILE DUCT
MTH	MONTH
MTL	MATERIAL
MULT	MULTIPLE
MVL	MERCURY VAPOR LIGHT
N	NORTH
N/R	NORTH ROADWAY
N/A	NOT APPLICABLE
N/N	NORTH OF NORTH RIGHT-OF-WAY LINE
N/O	NORTH OF
N/S	NORTH OF SOUTH RIGHT-OF-WAY LINE
NB	NORTHBOUND
NF	NEAR FACE
NIC	NOT IN CONTRACT
NO. OR #	NUMBER
NRC	NON-REVENUE CONNECTOR
NRCP	NON-REINFORCED CONCRETE PIPE
NRCP	NONREINFORCED CONCRETE PIPE
NS	NEAR SIDE
OBE	OTHER BUSINESS ENTERPRISE
OBS	OBSOLETE
OC	ON CENTER(S) OR ON CURVE OR OVERCROSSING
OCS	OVERHEAD CONTACT SYSTEM
OD	OUTSIDE DIAMETER
OE	OUTER EDGE
OFC	ORANGEBURG FIBER CONDUIT
OG	ORIGINAL GROUND/GRADE
OH	OVERHEAD
OPP	OPPOSITE
ORIG	ORIGINAL
ORL	ORNAMENTAL LIGHTING
OTM	OTHER TRACK MATERIAL
P	PIPE, PROPERTY LINE
PA	POLICE ALARM OR PUBLIC ADDRESS
PACBELL	PACIFIC BELL (SBC)
PB	PULL BOX
PC	POINT OF CURVATURE
PCC	PORTLAND CEMENT CONCRETE OR POINT OF COMPOUND CURVATURE
PCCP	PRE-STRESSED CONCRETE CYLINDER PIPE
PCL	PRIMARY CONTROL LINE
PCS	PIECES
PCVC	POINT OF COMPOUND VERTICAL CURVE
PD	PAPER DUCT
PE	POLYETHYLENE OR PLAIN END
PED	PEDESTRIAN
PEM	POLYETHYLENE MAIN
PG	PROFILE GRADE
PGL	PROFILE GRADE LINE
PI	POINT OF INTERSECTION
PITO	POINT OF INTERSECTION OF TURNOUT
PIV	POST INDICATOR VALVE
PL	PLATE
℄	PROPERTY LINE
PLD	PLASTIC DUCT
PLT	PLASTIC TILE
PM	PARKING METER
PMB	PROCESSED MISCELLANEOUS BASE
PO	PUSH-ON JOINT
POC	POINT OF CURVE, POINT OF CONNECTION
POL	POLICE
POT	POINT ON TANGENT
PP	POWER POLE OR PAPER PIPE
PPD	PAPER PIPE DUCT
PRC	POINT OF REVERSE CURVE
PROD	PRODUCT
PROP	PROPERTY OR PROPOSED
PRVC	POINT OF REVERSE VERTICAL CURVE
PS	POINT OF SWITCH
PSF	POUNDS PER SQUARE FOOT
PSI	POUNDS PER SQUARE INCH
PSP	PAINT SHOP
PT	POINT OF TANGENCY
PT(S)	POINT(S)
PUE	PUBLIC UTILITY EASEMENT
PV	PLUG VALVE
PVC	POINT OF VERTICAL CURVATURE OR POLYVINYL CHLORIDE, POINT OF VERTICAL CURVE
PVCC	POINT OF VERTICAL COMPOUND CURVE
PVCP	POLYVINYL CHLORIDE PIPE
PVI	POINT OF VERTICAL INTERSECTION
PVMT	PAVEMENT
PVRC	POINT OF VERTICAL REVERSE CURVE
PVT	POINT OF VERTICAL TANGENT
PVT R/W	PRIVATE RIGHT-OF-WAY
PWR	POWER
Q	RATE OF FLOW IN CUBIC FEET PER SECOND
QTY	QUANTITY
QUAD	QUADRANGLE, QUADRANT
R	RADIUS, RIGHT
R&O	ROCK AND OIL
ROW	RIGHT-OF-WAY
RA	RECYCLING AGENT
RAC	RECYCLED ASPHALT CONCRETE
RAP	RECLAIMED ASPHALT PAVEMENT
RBAC	RUBBERIZED ASPHALT CONCRETE
RBM	RAILBOUND MANGANESE
RC	REINFORCED CONCRETE
RCB	REINFORCED CONCRETE BOX (CULVERT)
RCC	RAIL CONSTRUCTION CORPORATION
RCE	REGISTERED CIVIL ENGINEER
RCP	REINFORCED CONCRETE PIPE
RCV	REMOTE CONTROL VALVE
RD	ROAD
RECT	RECTANGLE OR RECTIFIER
REF	REFERENCE
REINF	REINFORCE, REINFORCED, OR REINFORCEMENT
RELOC	RELOCATE, RELOCATED
REQD	REQUIRED OR REQUIRE
RES	RESERVOIR
RET	RETAINING
REV	REVISE, REVISED, OR REVISION
RGE	REGISTERED GEOTECHNICAL ENGINEER
RGS	RIGID GALVANIZED STEEL
RH	RIGHT HAND
RR	RAILROAD
RSE	REGISTERED STRUCTURAL ENGINEER
RT	RIGHT
RTE	REGISTERED TRAFFIC ENGINEER
RTP	RAIL TRANSIT PROJECT
RW	RETAINING WALL
RY	RAILWAY
S	SOUTH, SLOPE, OR SIGN
S & I	STORAGE/INSPECTION
S/N	SOUTH OF NORTH RIGHT-OF-WAY LINE
S/S	SOUTH OF SOUTH RIGHT-OF-WAY LINE
SA	SERVICE AISLE
SB	SOUTHBOUND OR SPLICE BOX
SBC	SBC TELEPHONE (NOW AT&T)
SCC	STEEL CYLINDER CONCRETE (PIPE)
SCCP	STEEL CYLINDER CONCRETE PIPE
SCG	SOUTHERN CALIFORNIA GAS COMPANY
SCHED	SCHEDULE
SCL	SECONDARY CONTROL LINE
SCRRA	SOUTHERN CALIFORNIA REGIONAL RAIL AUTHORITY
SCWD	SINGLE CREOSOTED WOOD DUCT
SD	STORM DRAIN
SDMH	STORM DRAIN MAINTENANCE HOLE

SRJV
DEC 03 2012
ISSUED FOR CONSTRUCTION

REV	DATE	BY	APP	REG NO	EXPIRES	SEAL HOLDER	DESCRIPTION
0	7/23/12	FH	DJA	C53031	06-30-13	DARREN J. ADRIAN	APPROVED FOR CONSTRUCTION

REVISION DATES (DESIGN STAGE ONLY)

DESIGNED BY R. BROWNE
DRAWN BY R. BROWNE
CHECKED BY F. HOFFMANN
IN CHARGE D. ADRIAN
DATE 7/23/12

REGISTERED PROFESSIONAL ENGINEER — DARREN J. ADRIAN — No. C53031 — Exp. 06-30-13 — CIVIL — STATE OF CALIFORNIA

Exposition Metro Line Construction Authority
Expo
11-30-12 Exposition Construction Authority
Approved for Construction Drawings - AFC
EXPO SKANSKA RADOS
444 South Flower Street
Suite 2200
Los Angeles, CA 90071
TEL (213) 443-7463
FAX (213) 362-9481
PARSONS BRINCKERHOFF
Kimley-Horn and Associates, Inc.
523 WILSHIRE BOULEVARD SUITE 320 LOS ANGELES, CA 90017 TEL: (213) 488-1270
CURRENT STATES

EXPOSITION LRT PROJECT- PHASE 2
GENERAL
STREET IMPROVEMENT
MISCELLANEOUS ABBREVIATIONS
SHEET 2 OF 3

CONTRACT NO XP8902-002
DRAWING NO G-3A-304 REV 0
SCALE NO SCALE
SHEET NO 7 OF 134

SCALES: HORIZ SCALE: NO SCALE; VERT SCALE: NO SCALE
SHEET
INDEX NUMBER

CITY DRAWING NO. 9301
SHEET NO.: 7 OF 134
DATE: 08-24 2012
SUBMITTED BY: Doug deVinck
APPROVED BY: LEON E. SWAIN, P.E., CITY ENGINEER
ENGINEERING
REFERENCE:
REVIEWED: DATE: 20
REVIEWED: DATE: 20
APPROVED: DATE: 08-24 2012
CITY

NO.	DATE	BY	DESCRIPTION
			REVISIONS

APPROVED

City of Santa Monica
Department of Public Works
1437 4th Street, Suite 300 Santa Monica, CA 90401
TEL. (310)458-8721 FAX. (310)393-4425
e-mail : smengineering@smgov.net

K:\LDT_RDWY\094617000 - Expo Ph 2\Working\04 BATCH PLOT\Temp Export Files from PW\Roadway\expo2-g-3a-304.plg

Plotted by: justin.gatza 7/18/2012 5:47:45 PM
Plot Driver=EXPO2-PDF-Full-BW.plt
7/19/2012
Pentable=EXPO2-PENTABLE.tbl
K:\LDT_RDWY\094617000 - Expo Ph 2\Working\04 BATCH PLOT\Temp Export Files from PW\Roadway\expo2-g-3a-304.plg

Sheet Version 2.01

MISCELLANEOUS ABBREVIATIONS

SDR	STANDARD THERMOPLASTIC PIPE DIMENSION RATIO (RATIO OF PIPE O.D. TO MINIMUM WALL THICKNESS)
SEC	SECONDS
SECT	SECTION
SF	SQUARE FOOT
SFP	SITE FINISH PLAN
SG	SUB GRADE
SHT	SHEET
SI	INTERNATIONAL SYSTEM OF UNITS (METRIC)
SIG	SIGNAL
SIM	SIMILAR
SIP	SUPPORT IN PLACE
SL	STREET LIGHT
SLC	STREET LIGHT CONDUIT
SLD	SLOTTED DRAIN
SLPB	STREET LIGHT PULL BOX
SMH	SEWER MANHOLE
SOCB	SIDE OPENING CATCH BASIN
SP	SPACE, SPACING, OR SITE PLAN
SPEC	SPECIFICATION(S) (REF)
SPPWC	STANDARD PLANS FOR PUBLIC WORKS CONSTRUCTION
SPR	SPRINKLER
SQ	SQUARE
SR	STANDARD RATIO
S/R	SOUTH ROADWAY
SRJ	STEEL RING JOINT (FOR RCP)
SS	SANITARY SEWER OR STOP SIGN
SSB	SELECT SUB-BASE
SSD	SANDSTONE CEMENT DUCT
SSM	STANDARD SURVEY MONUMENT
SSMH	SANITARY SEWER MANHOLE
SSPK	SURVEY SPIKE
SSPWC	STANDARD SPECIFICATIONS FOR PUBLIC WORKS CONSTRUCTION
ST	STREET
ST HWY	STATE HIGHWAY
STA	STATION
STD	STANDARD OR SEWER TILED DUCT
STL	STEEL
STM	STEAM
STOR	STORAGE
STP	STEEL PIPE
STR	STRAIGHT
STR GR	STRAIGHT GRADE
STRUCT	STRUCTURE
STY	STYRENE
SUB	SUBMITTED
SUPV	SUPERVISE OR SUPERVISOR
SURF	SURFACE
SW	SIDEWALK OR SWITCH
SWD	SIDEWALK DRAIN
SY	SQUARE YARD
SYM	SYMMETRICAL
T & B	TOP AND BOTTOM
T/F	TOP OF FOOTING
T/R	TOP OF RAIL
T/W	TOP OF WALL
TAN	TANGENT
TC	TILE CONDUIT, TOP OF CURB, TRACK CENTER, OR TRAIN CONTROL
TCC	TRAIN CONTROL/COMMUNICATIONS
TCCB	TRAIN CONTROL/COMMUNICATIONS BUILDING
TCCR	TRAIN CONTROL/COMMUNICATIONS ROOM
TCP	TRAFFIC CONTROL PLAN
TDC	TOP OF DEPRESSED CURB
TEL	TELEPHONE
TELE	TELESCOPING
TEMP	TEMPERATURE OR TEMPORARY
TERM	TERMINAL
TF	TOP OF FACE
TG	TOP OF GRADE, TOP OF GRATE, OR TELEGRAPH
TH	TEST HOLE
THEO	THEORETICAL
THK	THICK OR THICKNESS
TL	TRAFFIC LIGHT OR TOE LENGTH
TMH	TELEPHONE MANHOLE
TO	TURNOUT
TOP	TOP OF PIPE
TOPO	TOPOGRAPHY
TOR	TOP OF RAIL
TOS	TOP OF SLOPE
TP	POLICE TELEPHONE, TRACTION POWER
TPS OR TPSS	TRACTION POWER SUBSTATION
TPSS	TRACTION POWER SUPPLY SYSTEM
TR	TRACT
TRANS	TRANSITION
TRD	TRANSIT DUCT
TRK	TRACK
TRKD	TRACK DRAIN
TRPB	TRANSIT SHELTER PULLBOX
TS	TRAFFIC SIGNAL OR TRANSITION STRUCTURE
TSC	TRAFFIC SIGNAL CONDUIT
TSCB	TRAFFIC SIGNAL CONTROL BOX
TSPB	TRAFFIC SIGNAL PULLBOX
TSS	TRAFFIC SIGNAL STANDARD
TV	TELEVISION
TVCC	TRANSPORTED VITRIFIED CLAY CONDUIT
TVM	TICKET VENDING MACHINE
TW	TOP OF WALL
TYP	TYPICAL
UC	UNDERCROSSING OR UNDER CONSTRUCTION
UD	UNDERDRAIN
UG	UNDERGROUND
UNK	UNKNOWN
UNO	UNLESS NOTED OTHERWISE
UP	UNDERPASS OR COMBINATION POWER/TELEPHONE POLE
UPE	UNDER PLATFORM EXHAUST
USA	UNDERGROUND SERVICE ALERT
V	VALVE, RATE OF SPEED, OR DESIGN SPEED
VAC	VACUUM
VAP	VERTICAL ANGLE POINT
VAR	VARIES OR VARIABLE
VB	VALVE BOX
VC	VERTICAL CURVE
VCC	VITRIFIED CLAY CONDUIT
VCD	VITRIFIED CLAY DUCT
VCP	VITRIFIED CLAY PIPE
VCP(ES)	VITRIFIED CLAY PIPE (EXTRA STRENGTH)
VCT	VITRIFIED CLAY TILE
VERT	VERTICAL
VLT	VAULT
VOL	VOLUME
VT	VARIABLE THICKNESS
W	WEST, WATER, WIDTH OR WIDER
W/	WITH
W/E	WEST OF EAST RIGHT-OF-WAY LINE
W/O	WITHOUT
W/W	WEST TO WEST RIGHT-OF-WAY LINE
WATCH	WORK AREA TRAFFIC CONTROL HANDBOOK
WB	WESTBOUND
WBE	WOMEN BUSINESS ENTERPRISE
WD	WATER DETECTOR
WG	WHITE GAS
WHH	WATER HANDHOLE
WHSE	WAREHOUSE
WI	WROUGHT IRON
WID	WIDTH
WIP	WROUGHT IRON PIPE
WL	WATER LEVEL
WLKY	WALKWAY
WLN	WATER LINE
WM	WATER METER
WMH	WATER MAINTENANCE HOLE
WP	WORKING POINT OR WORK POINT
WPJ	WEAKENED PLANE JOINT
WSP(L)	WELDED STEEL PIPE (CEMENT LINED)
W'TERLY	WESTERLY
WTR	WATER
WTW	WALL TO WALL
WV	WATER VALVE
WW	WASTEWATER
XCONN	CROSS CONNECTION
X-DRAIN	CROSS DRAIN
X-ING	CROSSING
X-MITER	TRANSMITTER
XO OR X-OVER	CROSSOVER

SRJV
DEC 03 2012
ISSUED FOR CONSTRUCTION

REV	DATE	BY	APP	REG NO	EXPIRES	SEAL HOLDER	DESCRIPTION
0	7/23/12	FH	DJA	C53031	06-30-13	DARREN J. ADRIAN	APPROVED FOR CONSTRUCTION

DESIGNED BY R. BROWNE
DRAWN BY R. BROWNE
CHECKED BY F. HOFFMANN
IN CHARGE D. ADRIAN
DATE 7/23/12

REGISTERED PROFESSIONAL ENGINEER — DARREN J. ADRIAN — No. C53031 — Exp. 06-30-13 — CIVIL — STATE OF CALIFORNIA

Exposition Metro Line Construction Authority
Expo
11-30-XL
Exposition Construction Authority
Approved for Construction Drawings - AFC
EXPO SKANSKA RADOS
444 South Flower Street
Suite 2200
Los Angeles, CA 90071
TEL (213) 443-7463
FAX (213) 362-9481
PARSONS BRINCKERHOFF
Kimley-Horn and Associates, Inc.
CURRENT STATUS

EXPOSITION LRT PROJECT- PHASE 2
GENERAL
STREET IMPROVEMENT
MISCELLANEOUS ABBREVIATIONS
SHEET 3 OF 3

CONTRACT NO XP8902-002
DRAWING NO G-3A-305 REV 0
SCALE NO SCALE
SHEET NO 8 OF 134

SCALES: HORIZ SCALE: NO SCALE; VERT SCALE: NO SCALE
SHEET
INDEX NUMBER

justin.gatza 5:47:45 PM 7/19/2012
Plot Driver=EXPO2-PDF-Full-BW.plt
Pentable=EXPO2-PENTABLE.tbl
K:\LDT_RDWY\094617000 - Expo Ph 2\Working\04 BATCH PLOT\Temp Export Files from PW\Roadway\expo2-g-3a-305.plg

REVISION DATES (DESIGN STAGE ONLY)

Sheet Version 2.01

CITY DRAWING NO. 9301
SHEET NO: 8 OF 134
DATE: 08-24 20 12
SUBMITTED BY:
APPROVED BY: LEON E. SWAIN, P.E., CITY ENGINEER
REFERENCE:
REVIEWED: DATE: 20
REVIEWED: DATE: 20
REVIEWED: DATE: 08-24 20 12
CITY ENGINEERING
APPROVED

NO.	DATE	BY	DESCRIPTION
			REVISIONS

City of Santa Monica
Department of Public Works
1437 4th Street, Suite 300 Santa Monica, CA 90401
TEL. (310)458-8721 FAX. (310)393-4425
e-mail : smengineering@smgov.net

Plotted by: justin.gatza 7/19/2012 K:\LDT_RDWY\094617000 - Expo Ph 2\Working\04 BATCH PLOT\Temp Export Files from PW\Roadway\expo2-g-3a-305.plg

LINE SYMBOLS

	(< 24"ø)
	24"ø OR LARGER
E(OH)	EXISTING OVERHEAD ELECTRIC
E	EXISTING ELECTRICAL
TV	EXISTING CABLE TV
SS	EXISTING SANITARY SEWER
SD	EXISTING STORM DRAIN
G	EXISTING GAS
SL	EXISTING STREET LIGHT
T	EXISTING TELEPHONE
OIL	EXISTING OIL
W	EXISTING WATER
F.O.	EXISTING FIBER OPTIC
W	EXISTING RECLAIMED WATER
T(OH)	EXISTING OVERHEAD TELEPHONE
FUEL	EXISTING FUEL
CATV(OH)	EXISTING CABLE TV OVERHEAD
E(OH)	OVERHEAD ELECTRIC-REARRANGEMENT
E	ELECTRICAL-REARRANGEMENT
TV	CABLE TV-REARRANGEMENT
SS	SANITARY SEWER-REARRANGEMENT
SD	STORM DRAIN-REARRANGEMENT
TG	GAS-REARRANGEMENT
SL	STREET LIGHT-REARRANGEMENT
T	TELEPHONE-REARRANGEMENT
OIL	OIL-REARRANGEMENT
W	WATER-REARRANGEMENT
F.O.	FIBER OPTIC-REARRANGEMENT
W	RECLAIMED WATER-REARRANGEMENT
T(OH)	OVERHEAD TELEPHONE-REARRANGEMENT
FUEL	FUEL-REARRANGEMENT
CATV(OH)	CABLE TV OVERHEAD-REARRANGEMENT
	SOUND WALL
	RETAINING WALL
	RETAINING WALL
	3'-7" HIGH TUBULAR STEEL PIPE
	4' HIGH STANDARD WIRE MESH FENCE
	6' HIGH STANDARD WIRE MESH FENCE
	8' HIGH STANDARD WIRE MESH FENCE
	4' HIGH ENHANCED PICKET FENCE
	6' HIGH ENHANCED PICKET FENCE
	8' HIGH ENHANCED PICKET FENCE
	6' HIGH WOOD FENCE

SYMBOLS

AUTOMATIC GATE INTO PARKING AREA	
BARRICADE POSTS, BOLLARDS	
BEGIN OR END PLATFORM	BP OR EP
BENCH MARK	
BILLBOARD	
BLOCK WALL	
BORING & NUMBER	BOR 17
BOX	
BREAK LINE	
BRIDGE	
BUILDING	
BUMPING POST	
BUMPING POST NUMBER	000
CANOPY	
CATCH BASIN	
CENTERLINE (ROADWAY)	
CLEANOUT	CO
COLUMN, BENT	
CONCRETE BARRIER	
CONCRETE CHANNEL	
CONSTRUCTION EASEMENT (TEMPORARY)	
CONTOUR LINES	40, 50

SYMBOLS

CONTROL POINT OR STREET INTERSECTION POINT	4-7-1
COORDINATE GRID CROSSHAIR	E174000, N87000
CURB	
CURB AND GUTTER	
CURVE NUMBER	XXXX
CURVE POINT	PC, PT, PCC
DEPRESSION	
DRAINAGE DITCH OR SWALE	
DRAINAGE INLET	
PROPOSED DRIVEWAY	
EDGE OF PAVEMENT	EP
EARTH	
ELEVATION (EXISTING)	(175.20)
EMBANKMENT OR SLOPE	TOP OF SLOPE, BOTTOM OF SLOPE
EXISTING GROUND LINE	
FENCE CHAIN LINK OR OTHER (EXISTING)	
FENCE CHAIN LINK OR OTHER (NEW)	
FIRE HYDRANT (EXISTING)	
FIRE HYDRANT (RELOCATED)	
FLAGPOLE	FP
FOUNDATION OR RUIN	
GATE	

SYMBOLS

GUARD RAIL	
GRAVEL OR DIRT ROAD	
GROUND ROD IN WELL	
GUY POLE	GP
GUY WIRE	
HANDICAPPED PARKING	
HEADSPAN	
HIGH VOLTAGE VAULT	HVV
HOSE BIB	
LANE LINES	
LIGHT POLE (EXISTING)	
LIGHT POLE (RELOCATED)	
LRT TCC SYSTEM HANDHOLE	CSE001
LRT TCC SYSTEM MAINTENANCE HOLE	CSE050
MAINTENANCE HOLE	SMH, EMH, TMH, ETC
MATCH LINE	
METER BOX	WM
OIL WELL	
ORCHARD	
OVERHEAD SIGN	
OVERHEAD WIRES AND CABLES	
PARKING METER	

SRJV
DEC 03 2012
ISSUED FOR CONSTRUCTION

REV	DATE	BY	APP	REG NO	EXPIRES	SEAL HOLDER	DESCRIPTION
0	7/23/12	FH	DJA	C53031	06-30-13	DARREN J. ADRIAN	APPROVED FOR CONSTRUCTION

REVISION DATES (DESIGN STAGE ONLY)

DESIGNED BY J. GATZA
DRAWN BY J. GATZA
CHECKED BY F. HOFFMANN
IN CHARGE D. ADRIAN
DATE 7/23/12

REGISTERED PROFESSIONAL ENGINEER — DARREN J. ADRIAN — No. C53031 — Exp. 06-30-13 — CIVIL — STATE OF CALIFORNIA

Exposition Metro Line Construction Authority
Expo
11-30-12 Exposition Construction Authority
Approved for Construction Drawings - ATC

EXPO SKANSKA RADOS
444 South Flower Street
Suite 2200
Los Angeles, CA 90071
TEL (213) 443-7463
FAX (213) 362-9481

PARSONS BRINCKERHOFF
Kimley-Horn and Associates, Inc.
CURRENT STATUS

EXPOSITION LRT PROJECT- PHASE 2
GENERAL
STREET IMPROVEMENT
SYMBOLS AND LEGEND
SHEET 1 OF 2

CONTRACT NO XP8902-002
DRAWING NO G-3A-306 REV 0
SCALE NO SCALE
SHEET NO 9 OF 134

justin.gatza 5:47:46 PM 7/19/2012
Plot Driver=EXPO2-PDF-Full-BW.plt Pentable=EXPO2-PENTABLE.tbl
K:\LDT_RDWY\094617000 - Expo Ph 2\Working\04 BATCH PLOT\Temp Export Files from PW\Roadway\expo2-g-3a-306.plg

SCALES HORIZ SCALE: NO SCALE VERT SCALE: NO SCALE
SHEET
INDEX NUMBER

CITY DRAWING NO. 9301
SHEET NO: 9 OF 134
DATE: 08-24 20 12
REFERENCE:
SUBMITTED BY:
APPROVED BY: LEON E. SWAIN, P.E., CITY ENGINEER
ENGINEERING
REVIEWED: DATE: 20
REVIEWED: DATE: 20
REVIEWED: DATE: 08-24 20 12
CITY
APPROVED

NO.	DATE	BY	DESCRIPTION
			REVISIONS

City of Santa Monica
Department of Public Works
1437 4th Street, Suite 300 Santa Monica, CA 90401
TEL. (310)458-8721 FAX. (310)393-4425
e-mail : smengineering@smgov.net

Plotted by: justin.gatza 7/19/2012 K:\LDT_RDWY\094617000 - Expo Ph 2\Working\04 BATCH PLOT\Temp Export Files from PW\Roadway\expo2-g-3a-306.plg

Sheet Version 2.01

SYMBOLS

- PARKING SPACES
- PERFORATED SUBDRAIN
- PICTURE CENTER (P C 1 4)
- PLANTER
- POST WITH LIGHT & TRAFFIC SIGNAL (EXISTING)
- POST WITH LIGHT & TRAFFIC SIGNAL (RELOCATED)
- POINT OF SWITCH AND A TURNOUT
- POWER POLE (EXISTING)
- POWER POLE (RELOCATED)
- PROPOSED RIGHT-OF-WAY
- PROPOSED VEHICLE WARNING DEVICE AND GATE
- PROPOSED PEDESTRIAN WARNING DEVICE AND GATE
- RAILROAD CROSSING GATE
- RIDGE (R)
- RIGHT-OF-WAY OR METRO RIGHT-OF-WAY (EXISTING)
- SAWCUT
- SHEET LIMIT LINE
- SEWER, WATER OR GAS ENCASEMENT (UB)
- SIDEWALK, CONCRETE
- SHRUBBERY
- SOUND WALL
- SPA (S)
- SPOT ELEVATION (175.2)

SYMBOLS

- STANDPIPE (SP)
- STREET LIGHT
- SUBGRADE EARTH
- SURVEY MONUMENT
- TANK (T)
- TRACK CENTERLINE
- TRACTION POWER MANHOLE (TPN000)
- TRACTION POWER SUBSTATION (TPSS)
- TRAFFIC SIGNAL (EXISTING)
- TRAFFIC SIGNAL (RELOCATED)
- TRANSIT SIGNAL
- TREE
- WELL (WELL)
- WORK POINT
- UNDERDRAIN (UD)
- UTILITY BOX
- UTILITY POLE (EXISTING)
- UTILITY POLE (RELOCATED)
- VALVE, VENT (V, WV)
- WATER OR GAS VALVE COVER (GV)
- WALL (EXISTING)
- NEW WALL OR BALLAST RETAINER

SRJV
DEC 03 2012
ISSUED FOR CONSTRUCTION

REV	DATE	BY	APP	REG NO	EXPIRES	SEAL HOLDER	DESCRIPTION
0	7/23/12	FH	DJA	C53031	06-30-13	DARREN J. ADRIAN	APPROVED FOR CONSTRUCTION

DESIGNED BY J. GATZA
DRAWN BY J. GATZA
CHECKED BY F. HOFFMANN
IN CHARGE D. ADRIAN
DATE 7/23/12

REGISTERED PROFESSIONAL ENGINEER DARREN J. ADRIAN No. C53031 Exp. 06-30-13 CIVIL STATE OF CALIFORNIA

Exposition Metro Line Construction Authority
Expo
11-30-12 Exposition Construction Authority Approved for Construction Drawings - AFC

EXPO SKANSKA RADOS
444 South Flower Street
Suite 2200
Los Angeles, CA 90071
TEL (213) 443-7463
FAX (213) 362-9481

PARSONS BRINCKERHOFF
CURRENT STATUS
Kimley-Horn and Associates, Inc.
935 WILSHIRE BOULEVARD SUITE 350 LOS ANGELES, CA 90017 TEL: (213) 489-1278

EXPOSITION LRT PROJECT- PHASE 2
GENERAL
STREET IMPROVEMENT
SYMBOLS AND LEGEND
SHEET 2 OF 2

CONTRACT NO XP8902-002
DRAWING NO G-3A-307 REV 0
SCALE NO SCALE
SHEET NO 10 OF 134

justin.gatza 5:47:46 PM 7/19/2012
Plot Driver=EXPO2-PDF-Full-BW.plt Pentable=EXPO2-PENTABLE.tbl
K:\LDT_RDWY\094617000 - Expo Ph 2\Working\04 BATCH PLOT\Temp Export Files from PW\Roadway\expo2-g-3a-307.plg

SCALES HORIZ SCALE: NO SCALE VERT SCALE: NO SCALE
SHEET
INDEX NUMBER

REVISION DATES (DESIGN STAGE ONLY)

REFERENCE :
SUBMITTED BY: Doug deVinet
APPROVED BY: LEON E. SWAIN, P.E., CITY ENGINEER
CITY DRAWING NO. 9301
SHEET NO.: 10 OF 134
DATE : 08-24 2012

REVIEWED : DATE : 20
REVIEWED : DATE : 20
SWED : DATE : 08-24 2012
CITY ENGINEERING

REVISIONS
NO. DATE BY DESCRIPTION APPROVED

City of Santa Monica
Department of Public Works
1437 4th Street, Suite 300 Santa Monica, CA 90401
TEL. (310)458-8721 FAX. (310)393-4425
e-mail : smengineering@smgov.net

Plotted by: justin.gatza 7/19/2012 K:\LDT_RDWY\094617000 - Expo Ph 2\Working\04 BATCH PLOT\Temp Export Files from PW\Roadway\expo2-g-3a-307.plg

Sheet Version 2.01

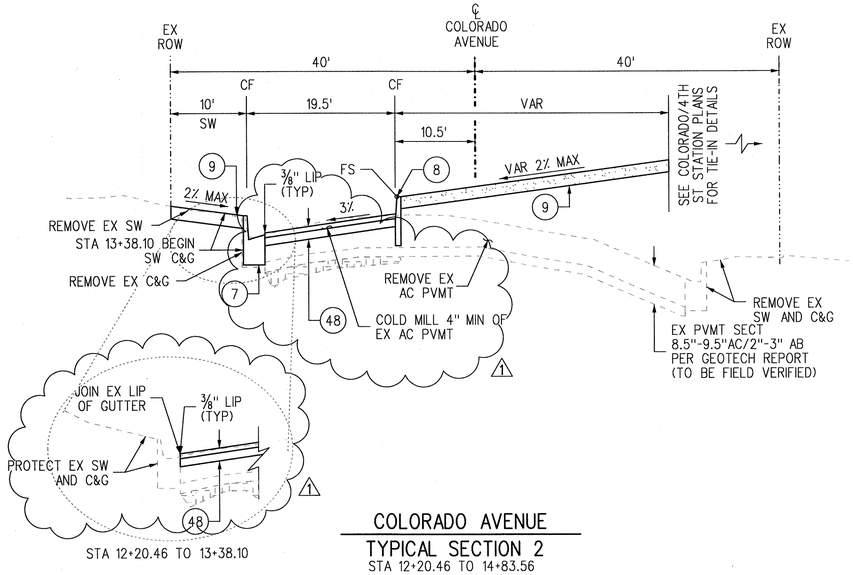

COLORADO AVENUE
TYPICAL SECTION 2
STA 12+20.46 TO 14+83.56
NO SCALE

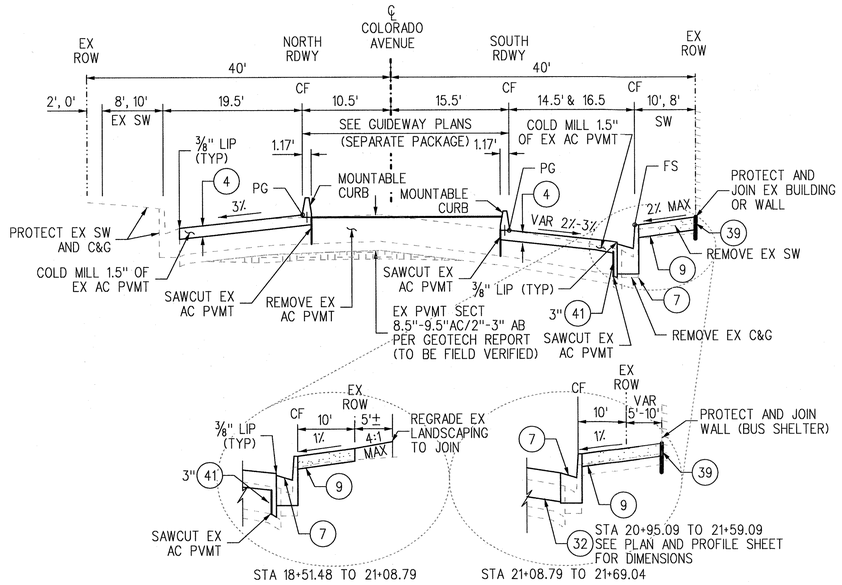

COLORADO AVENUE
TYPICAL SECTION 4
STA 18+56.50 TO 23+50.00
NO SCALE

CONSTRUCTION NOTES

1. RECONSTRUCT 9" PCC OVER 4" CRUSHED MISCELLANEOUS BASE PER GEOTECHNICAL REPORT AND SPECIFICATIONS.
3. CONSTRUCT 11.4" ASPHALT CONCRETE PAVEMENT OVER 12" SCARIFIED AND RECOMPACTED SUBGRADE PER GEOTECHNICAL REPORT AND SPECIFICATIONS.
4. CONSTRUCT VARIABLE DEPTH ASPHALT CONCRETE OVERLAY (1.5" MIN) PER GEOTECHNICAL REPORT AND SPECIFICATIONS.
6. CONSTRUCT AC/PCC JOINT PER CITY OF SANTA MONICA STD. DETAIL SM11.
7. CONSTRUCT CURB AND GUTTER PER CITY OF SANTA MONICA STD. DETAIL SM6; STD. CURB HEIGHT UNLESS NOTED OTHERWISE ON THE PLANS.
8. CONSTRUCT TYPE "A" CURB PER CITY OF SANTA MONICA STD. DETAIL SM6; STD. CURB HEIGHT UNLESS NOTED OTHERWISE ON THE PLANS.
9. CONSTRUCT 4" P.C.C. SIDEWALK. CONSTRUCT SIDEWALK JOINTS PER SPPWC STD. 112-2.
15. CONSTRUCT AC PAVEMENT FOR TIE-IN WITHIN PRIVATE PROPERTY. MATCH EXISTING SECTION PAVEMENT SECTION (4" MIN AC).
32. CONSTRUCT P.C.C. BUS PAD PER CITY OF SANTA MONICA STD. DETAIL SM2.
39. INSTALL WATERPROOFING MEMBRANE AT BUILDING.
41. CONSTRUCT PAVMENT CLOSURE PER CONSTRUCTION DETAIL SHEET CC-3C-301, DETAIL 1.
46. CONSTRUCT MODIFIED CURB AND GUTTER PER CONSTRUCTION DETAIL SHEET CC-3C-301, DETAIL 4.
48. CONSTRUCT VARIABLE DEPTH ASPHALT CONCRETE OVERLAY (4" MIN FROM PROPOSED GRADE). ASPHALT CONCRETE TO BE PLACED IN TWO LIFTS WITH THE FIRST LIFT AT 2.5" AND THE SECOND AT 1.5".

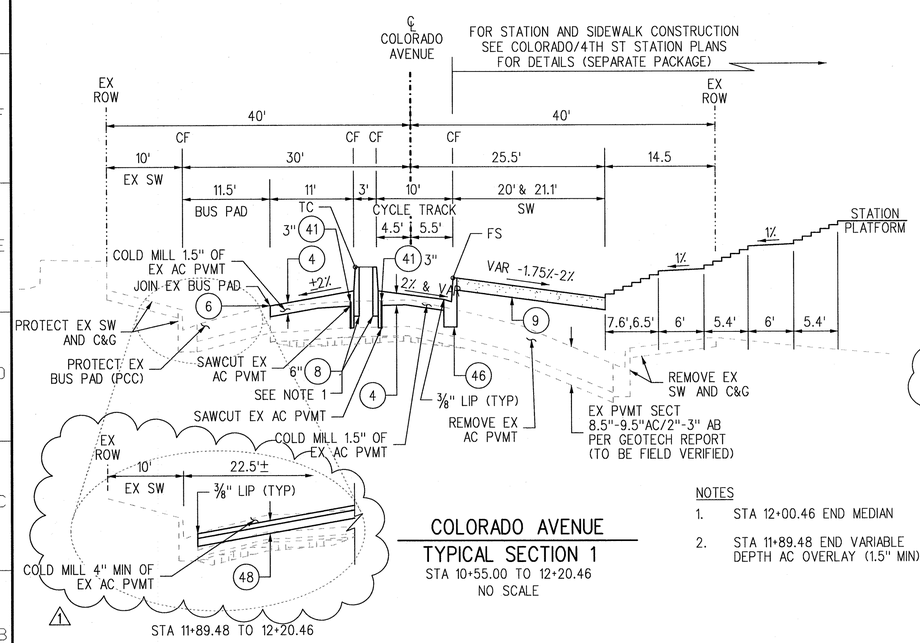

COLORADO AVENUE
TYPICAL SECTION 1
STA 10+55.00 TO 12+20.46
NO SCALE

NOTES
1. STA 12+00.46 END MEDIAN
2. STA 11+89.48 END VARIABLE DEPTH AC OVERLAY (1.5" MIN)

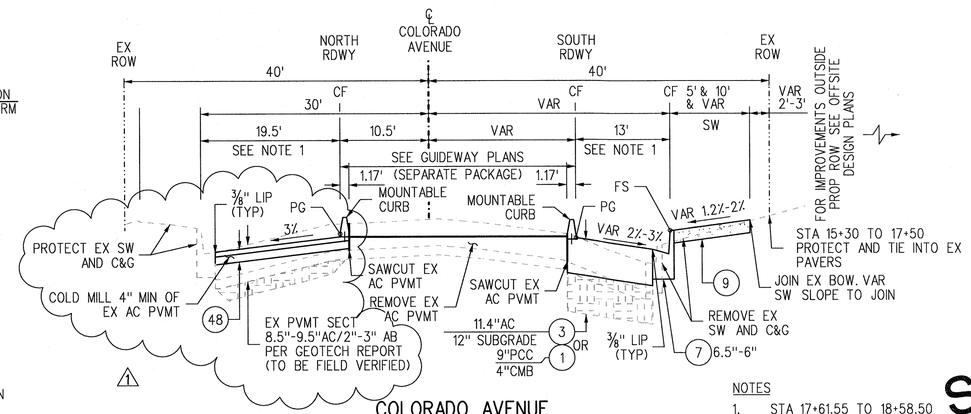

COLORADO AVENUE
TYPICAL SECTION 3
STA 14+83.56 TO 17+64.50
NO SCALE

NOTES
1. STA 17+61.55 TO 18+58.50 RECONSTRUCT PCC PAVEMENT

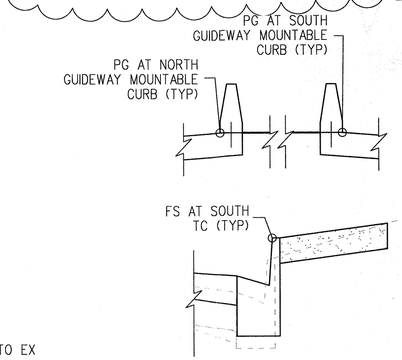

VERTICAL PROFILE LABEL DETAIL
PERTAINS TO TYPICAL SECTIONS 3 & 4
NO SCALE

SRJV
JUL 01 2014
ISSUED FOR CONSTRUCTION
Exposition Construction Authority Approved for Construction Drawings - AFC
JUN 30 2014

REV	DATE	BY	APP	REG NO	EXPIRES	SEAL HOLDER	DESCRIPTION
1	6/11/14	FH	DJA	C53031	06-30-13	DARREN J. ADRIAN	ECI 77
0	10/19/12	FH	DJA	C53031	06-30-13	DARREN J. ADRIAN	APPROVED FOR CONSTRUCTION

REVISION DATES (DESIGN STAGE ONLY)

DESIGNED BY J. GATZA
DRAWN BY J. GATZA
CHECKED BY F. HOFFMANN
IN CHARGE D. ADRIAN
DATE 10/19/12

REGISTERED PROFESSIONAL ENGINEER — DARREN J. ADRIAN — No. C53031 — Exp. 06-30-15 — CIVIL — STATE OF CALIFORNIA

Exposition Metro Line Construction Authority
Expo
EXPO SKANSKA RADOS
444 South Flower Street, Suite 2200, Los Angeles, CA 90071, TEL (213) 443-7463, FAX (213) 362-9481
PARSONS BRINCKERHOFF
Kimley-Horn and Associates, Inc. — 660 SOUTH FIGUEROA STREET, SUITE 2050, LOS ANGELES, CA 90017, TEL: (213) 261-1040

EXPOSITION LRT PROJECT- PHASE 2
STREET IMPROVEMENTS
COLORADO AVENUE
TYPICAL SECTIONS
STA 10+55.00 TO 23+50.00

CONTRACT NO XP8902-002
DRAWING NO CX-3C-301 REV 1
SCALE NO SCALE
SHEET NO 11 OF 108

SCALES: HORIZ SCALE: NO SCALE; VERT SCALE: NO SCALE
SHEET
INDEX NUMBER

justin.gatza 4:47:48 PM 6/11/2014
Plot Driver=EXPO2-PDF-Full-BW.plt
Pentable=EXPO2-PENTABLE.tbl
C:\Users\justin.gatza\Desktop\New folder (2)\expo2-cx-3c-301.plg

Sheet Version 2.01

CITY DRAWING NO. 9302
SHEET NO. 11 OF 108
DATE 6-17 2014
APPROVED BY: LEON E. SWAIN, P.E. CITY ENGINEER
REFERENCE
SUBMITTED BY
REVIEWED DATE 20
REVIEWED DATE 20
REVIEWED DATE 6-17 2014 CITY

REVISIONS: NO. DATE BY DESCRIPTION APPROVED

City of Santa Monica
Department of Public Works
1437 4th Street, Suite 300 Santa Monica, CA 90401
TEL. (310)458-8721 FAX. (310)393-4425
e-mail : smengineering@smgov.net

Plotted by: justin.gatza 6/11/2014 C:\Users\justin.gatza\Desktop\New folder (2)\expo2-cx-3c-301.plg

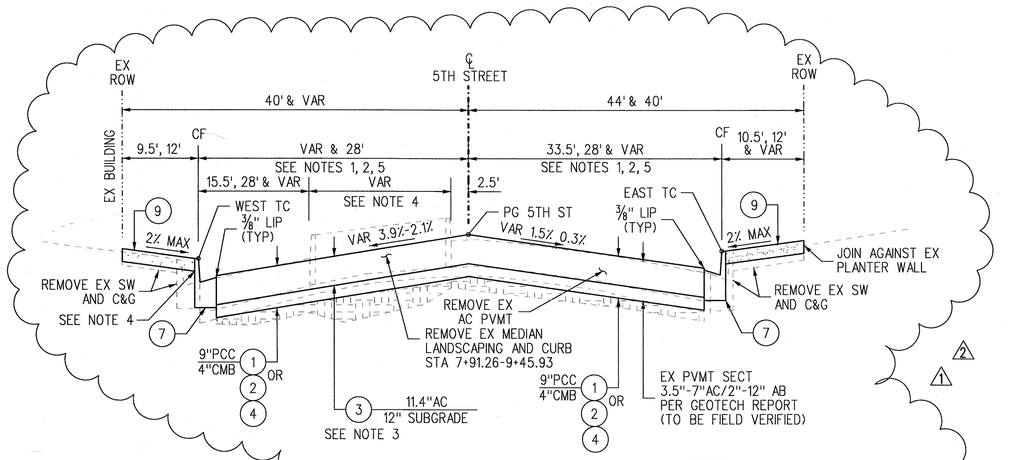

5TH STREET
TYPICAL SECTION 6
STA 8+86.21 TO 10+80.88
NO SCALE

NOTES

1. STA 10+45.03 TO 10+59.97 RECONSTRUCT AC PAVEMENT.
2. STA 10+59.97 TO 10+80.88 CONSTRUCT VARIABLE DEPTH OVERLAY.
3. STA 8+86.21 TO 9+01.69 CONSTRUCT AC PAVEMENT.
4. STA 10+75.08 END CONSTRUCT C&G. STA 10+80.07 END CONSTRUCT SIDEWALK.
5. STA 8+86.21 to 9+01.69 RECONSTRUCT AC PAVEMENT.

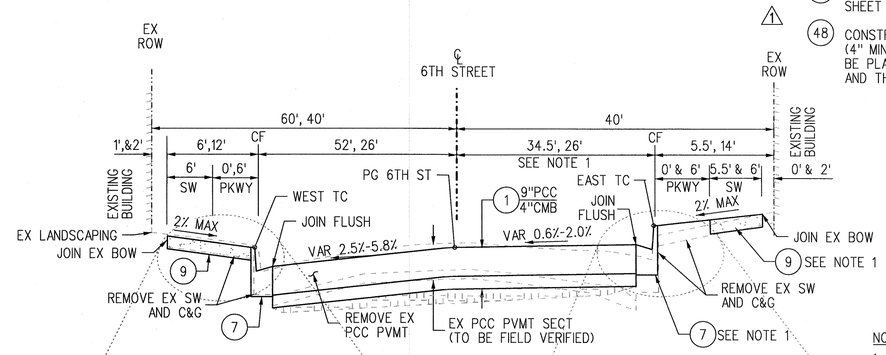

NOTES

1. STA 10+87.40 END CONSTRUCT SIDEWALK, C&G, RECONSTRUCT PCC

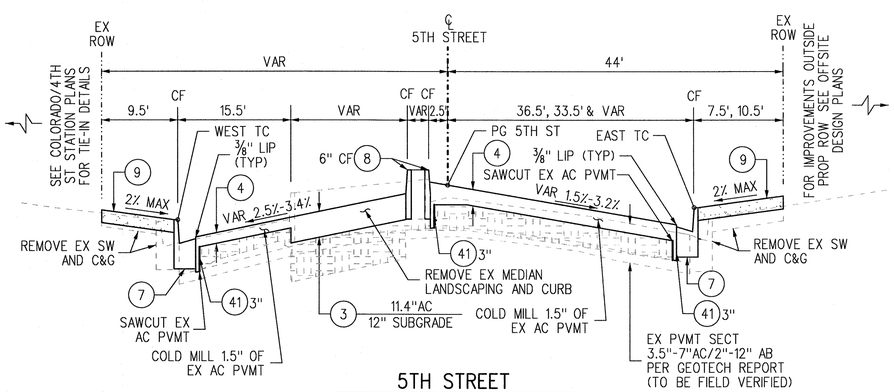

5TH STREET
TYPICAL SECTION 5
STA 7+87.29 TO 8+86.21
NO SCALE

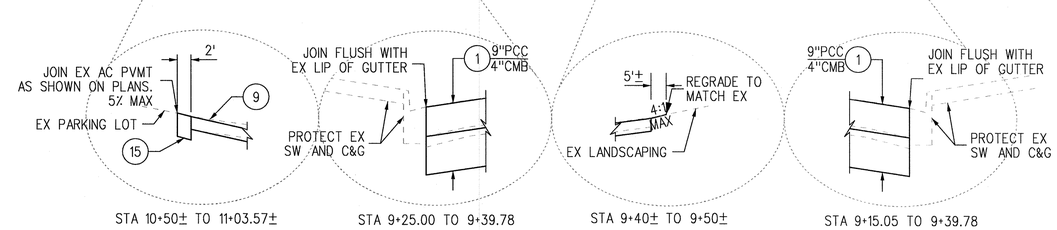

6TH STREET
TYPICAL SECTION 7
STA 9+25.00 TO 9+39.78
NO SCALE

CONSTRUCTION NOTES

1. RECONSTRUCT 9" PCC OVER 4" CRUSHED MISCELLANEOUS BASE PER GEOTECHNICAL REPORT AND SPECIFICATIONS.
2. RECONSTRUCT ASPHALT CONCRETE PAVEMENT TO MATCH EXISTING SECTION (8" MIN ASPHALT CONCRETE PAVEMENT). EXISTING BASE OR SUBGRADE SOILS SHALL BE COMPACTED TO 90% MINIMUM RELATIVE COMPACTION.
3. RECONSTRUCT 11.4" ASPHALT CONCRETE PAVEMENT OVER 12" SCARIFIED AND RECOMPACTED SUBGRADE PER GEOTECHNICAL REPORT AND SPECIFICATIONS.
4. CONSTRUCT VARIABLE DEPTH ASPHALT CONCRETE OVERLAY (1.5" MIN) PER GEOTECHNICAL REPORT AND SPECIFICATIONS.
7. CONSTRUCT CURB AND GUTTER PER CITY OF SANTA MONICA STD. DETAIL SM6; STD. CURB HEIGHT UNLESS NOTED OTHERWISE ON THE PLANS.
8. CONSTRUCT TYPE "A" CURB PER CITY OF SANTA MONICA STD. DETAIL SM6; STD. CURB HEIGHT UNLESS NOTED OTHERWISE ON THE PLANS.
9. CONSTRUCT 4" P.C.C. SIDEWALK. CONSTRUCT SIDEWALK JOINTS PER SPPWC STD. 112-2.
15. CONSTRUCT AC PAVEMENT FOR TIE-IN WITHIN PRIVATE PROPERTY. MATCH EXISTING SECTION PAVEMENT SECTION (4" MIN AC).
41. CONSTRUCT PAVMENT CLOSURE PER CONSTRUCTION DETAIL SHEET CC-3C-301, DETAIL 1.
48. CONSTRUCT VARIABLE DEPTH ASPHALT CONCRETE OVERLAY (4" MIN FROM PROPOSED GRADE). ASPHALT CONCRETE TO BE PLACED IN TWO LIFTS WITH THE FIRST LIFT AT 2.5" AND THE SECOND AT 1.5".

SRJV
SEP 09 2014
ISSUED FOR CONSTRUCTION

REV	DATE	BY	APP	REG NO	EXPIRES	SEAL HOLDER	DESCRIPTION
2	7/11/14	FH	DJA	C53031	06-30-13	DARREN J. ADRIAN	ECI 118
1	6/11/14	FH	DJA	C53031	06-30-13	DARREN J. ADRIAN	ECI 77
0	10/19/12	FH	DJA	C53031	06-30-13	DARREN J. ADRIAN	APPROVED FOR CONSTRUCTION

REVISION DATES (DESIGN STAGE ONLY)

DESIGNED BY J. GATZA
DRAWN BY J. GATZA
CHECKED BY F. HOFFMANN
IN CHARGE D. ADRIAN
DATE 10/19/12

REGISTERED PROFESSIONAL ENGINEER DARREN J. ADRIAN No. C53031 Exp. 06-30-15 CIVIL STATE OF CALIFORNIA

Exposition Metro Line Construction Authority
Expo
444 South Flower Street
Suite 2200
Los Angeles, CA 90071
TEL (213) 443-7463
FAX (213) 362-9481
EXPO SKANSKA RADOS
PARSONS BRINCKERHOFF
Kimley-Horn and Associates, Inc.
860 SOUTH FIGUEROA STREET SUITE 1010 LOS ANGELES, CA 90017 TEL: (213) 261-1010

DOCUMENT OUT OF DATE

EXPOSITION LRT PROJECT- PHASE 2
STREET IMPROVEMENTS
5TH AND 6TH STREET
TYPICAL SECTIONS

Exposition Construction Authority Approved for Construction Drawings - AFC
SEP 08 2014

CONTRACT NO XP8902-002
DRAWING NO CX-3C-302 REV 2
SCALE NO SCALE
SHEET NO 12 OF 108

justin.gatza 11:50:07 AM 7/11/2014
Plot Driver=EXPO2-PDF-Full-BW.plt Pentable=EXPO2-PENTABLE.tbl
C:\Users\justin.gatza\Desktop\EXPORT\expo2-cx-3c-302.plg

SCALES: HORIZ SCALE: NO SCALE; VERT SCALE: NO SCALE
SHEET
INDEX NUMBER

Sheet Version 2.01

REFERENCE:
SUBMITTED BY:
CITY DRAWING NO.
SHEET NO. OF
APPROVED BY: DEAN E. SWAIN, P.E., CITY ENGINEER — DATE: 9/24 2014

REVIEWED: DATE: 20
REVIEWED: DATE: 9/24 2014
REVIEWED: DATE: 8/19 2014

NO.	DATE	BY	DESCRIPTION

REVISIONS — APPROVED

City of Santa Monica
Department of Public Works
1437 4th Street, Suite 300 Santa Monica, CA 90401
TEL. (310)458-8721 FAX. (310)393-4425
e-mail : smengineering@smgov.net

Plotted by: justin.gatza 7/11/2014 C:\Users\justin.gatza\Desktop\EXPORT\expo2-cx-3c-302.plg

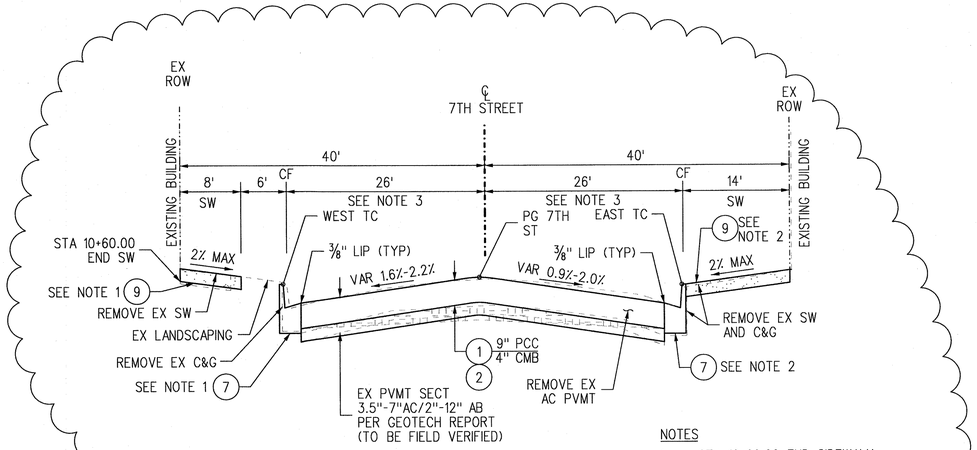

7TH STREET
TYPICAL SECTION 9
STA 9+45.01 TO 10+75.00
NO SCALE

NOTES

1. STA 10+60.00 END SIDEWALK AND C&G
2. STA 10+47.00 END SIDEWALK AND C&G
3. STA 10+47.00 TO 10+75.00 RECONSTRUCT AC PAVEMENT.

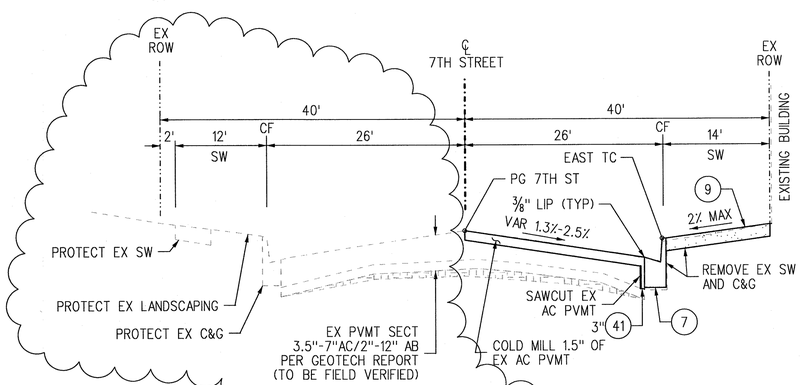

7TH STREET
TYPICAL SECTION 8
STA 9+16.16 TO 9+45.01
NO SCALE

CONSTRUCTION NOTES

1. RECONSTRUCT 9" PCC PAVEMENT OVER 4" CRUSHED MISCELLANEOUS BASE PER GEOTECHNICAL REPORT AND SPECIFICATIONS.
2. RECONSTRUCT ASPHALT CONCRETE PAVEMENT TO MATCH EXISTING SECTION (8" MIN ASPHALT CONCRETE PAVEMENT). EXISTING BASE OR SUBGRADE SOILS SHALL BE COMPACTED TO 90% MINIMUM RELATIVE COMPACTION.
4. CONSTRUCT VARIABLE DEPTH ASPHALT CONCRETE OVERLAY (1.5" MIN) PER GEOTECHNICAL REPORT AND SPECIFICATIONS.
7. CONSTRUCT CURB AND GUTTER PER CITY OF SANTA MONICA STD. DETAIL SM6; STD. CURB HEIGHT UNLESS NOTED OTHERWISE ON THE PLANS.
9. CONSTRUCT 4" P.C.C. SIDEWALK. CONSTRUCT SIDEWALK JOINTS PER SPPWC STD. 112-2.
41. CONSTRUCT PAVMENT CLOSURE PER CONSTRUCTION DETAIL SHEET CC-3C-301, DETAIL 1.

SRJV
SEP 04 2014
ISSUED FOR CONSTRUCTION

REV	DATE	BY	APP	REG NO	EXPIRES	SEAL HOLDER	DESCRIPTION
1	7/11/14	FH	DJA	C53031	06-30-15	DARREN J. ADRIAN	ECI 118
0	10/19/12	FH	DJA	C53031	06-30-13	DARREN J. ADRIAN	APPROVED FOR CONSTRUCTION

REVISION DATES (DESIGN STAGE ONLY)

DESIGNED BY J. GATZA
DRAWN BY J. GATZA
CHECKED BY F. HOFFMANN
IN CHARGE D. ADRIAN
DATE 10/19/12

REGISTERED PROFESSIONAL ENGINEER DARREN J. ADRIAN No. C53031 Exp. 06-30-15 CIVIL STATE OF CALIFORNIA

Exposition Metro Line Construction Authority
Expo
EXPO SKANSKA RADOS
444 South Flower Street
Suite 2200
Los Angeles, CA 90071
TEL (213) 443-7463
FAX (213) 362-9481

PARSONS BRINCKERHOFF
Kimley-Horn and Associates, Inc.
660 SOUTH FIGUEROA STREET SUITE 1400 LOS ANGELES, CA 90017 TEL: (213) 381-4040

EXPOSITION LRT PROJECT- PHASE 2
STREET IMPROVEMENTS
7TH STREET
TYPICAL SECTIONS
STA 9+16.16 TO 10+75.00

Exposition Construction Authority Approved for Construction Drawings - AFC
SEP 02 2014

CONTRACT NO XP8902-002
DRAWING NO CX-3C-303 REV 1
SCALE NO SCALE
SHEET NO 13 OF 108

SCALES: HORIZ SCALE: NO SCALE; VERT SCALE: NO SCALE
SHEET
INDEX NUMBER

justin.gatza 11:50:07 AM 7/11/2014
Plot Driver=EXPO2-PDF-Full-BW.plt
Pentable=EXPO2-PENTABLE.tbl
C:\Users\justin.gatza\Desktop\EXPORT\expo2-cx-3c-303.plg

Sheet Version 2.01

CITY DRAWING NO. 9302
SHEET NO. 13 OF 108
REFERENCE:
SUBMITTED BY:
APPROVED BY: LEON E. SWANN, P.E., CITY ENGINEER
DATE: 09/29 2014
ENGINEERING

REVIEWED: DATE: 20
REVIEWED: DATE: 9/29 2014
REVIEWED: DATE: 8/28 2014
CITY

NO.	DATE	BY	DESCRIPTION	APPROVED
			REVISIONS	

City of Santa Monica
Department of Public Works
1437 4th Street, Suite 300 Santa Monica, CA 90401
TEL. (310)458-8721 FAX. (310)393-4425
e-mail : smengineering@smgov.net

Plotted by: justin.gatza 7/11/2014 C:\Users\justin.gatza\Desktop\EXPORT\expo2-cx-3c-303.plg

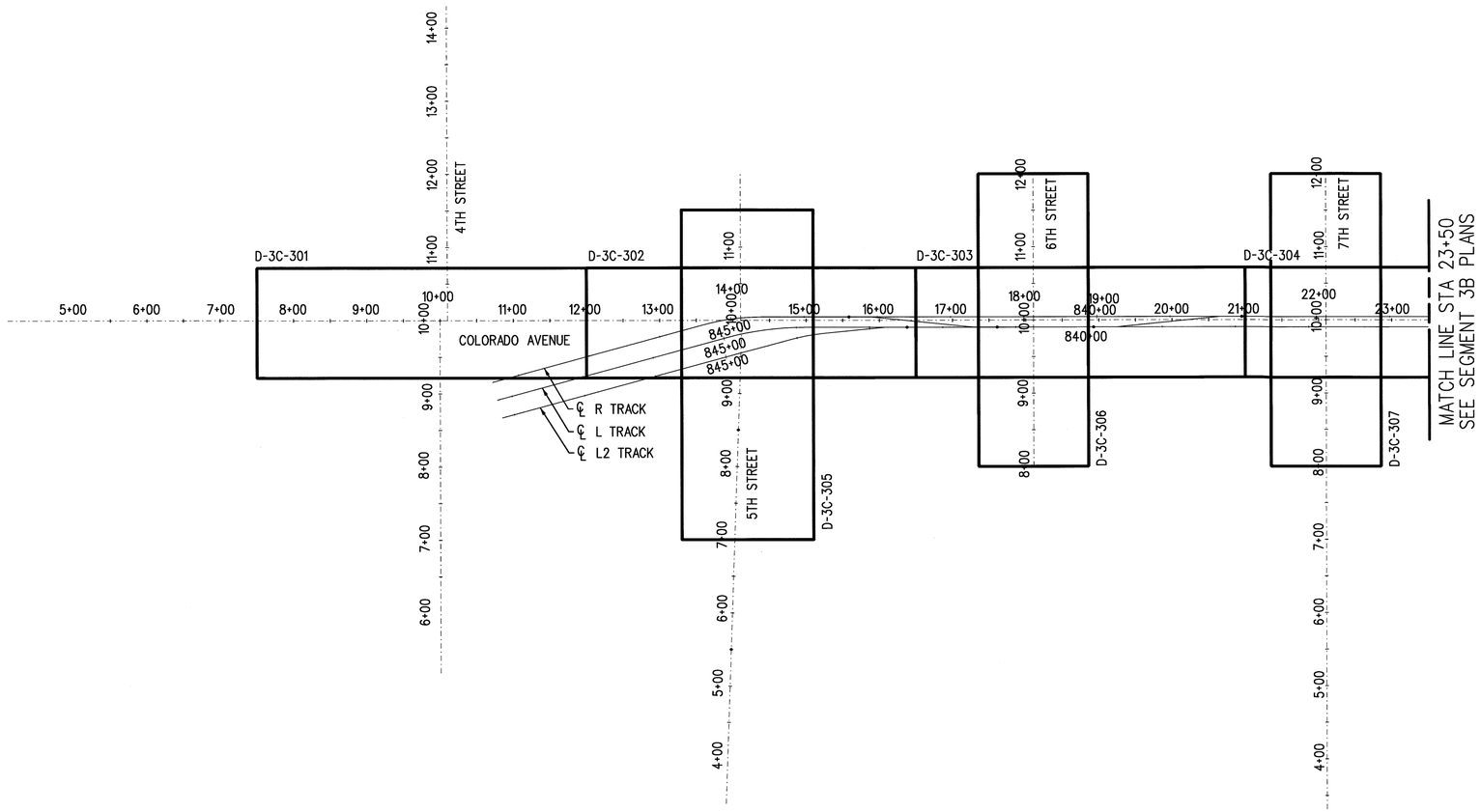

SRJV
MAR 29 2013
ISSUED FOR CONSTRUCTION

100' 0 100' 200'

REV	DATE	BY	APP	REG NO	EXPIRES	SEAL HOLDER	DESCRIPTION
0	10/19/12	FH	DJA	C53031	06-30-13	DARREN J. ADRIAN	APPROVED FOR CONSTRUCTION

REVISION DATES (DESIGN STAGE ONLY)

DESIGNED BY J. GATZA
DRAWN BY J. GATZA
CHECKED BY F. HOFFMANN
IN CHARGE D. ADRIAN
DATE 10/19/12

REGISTERED PROFESSIONAL ENGINEER DARREN J. ADRIAN No. C53031 Exp. 06-30-13 CIVIL STATE OF CALIFORNIA

Exposition Metro Line Construction Authority
Expo
EXPO SKANSKA RADOS
444 South Flower Street
Suite 2200
Los Angeles, CA 90071
TEL (213) 443-7463
FAX (213) 362-9481

PARSONS BRINCKERHOFF
Kimley-Horn and Associates, Inc.
CURRENT STATUS

EXPOSITION LRT PROJECT- PHASE 2
DEMOLITION
COLORADO AVENUE
KEY MAP
STA 7+50 TO 23+50

Exposition Construction Authority
Approved for Construction
Drawings - AFC
MAR 28 2013

CONTRACT NO XP8902-002
DRAWING NO DK-3C-301
REV 0
SCALE 1"=100'
SHEET NO 14 OF 108

justin.gatza 9:49:56 PM 10/17/2012
Plot Driver=EXPO2-PDF-Full-BW.plt
Pentable=EXPO2-PENTABLE.tbl
K:\LDT_RDWY\094617000 - Expo Ph 2\Working\04 BATCH PLOT\Temp Export Files from PW\Roadway\expo2-dk-3c-301.plg

SCALES HORIZ SCALE: 1"=100' VERT SCALE: NO SCALE
SHEET
INDEX NUMBER

Sheet Version 2.01

NO.	DATE	BY	DESCRIPTION

REVISIONS

REVIEWED: DATE: 20__
REVIEWED: DATE: 20__
REVIEWED: DATE: 3-11 2013

REFERENCE:
SUBMITTED BY: Daey Jeskine
APPROVED BY: Gary Lemon
LEONARD SWANN, P.E., CITY ENGINEER
ENGINEERING
CITY DRAWING NO. 9302
SHEET NO.: 14 OF 108
DATE: 3-11 2013

City of Santa Monica
Department of Public Works
1437 4th Street, Suite 300 Santa Monica, CA 90401
TEL. (310)458-8721 FAX. (310)393-4425
e-mail : smengineering@smgov.net

Plotted by: justin.gatza 10/17/2012 K:\LDT_RDWY\094617000 - Expo Ph 2\Working\04 BATCH PLOT\Temp Export Files from PW\Roadway\expo2-dk-3c-301.plg

EXISTING FACILITIES LEGEND

1. AC PAVEMENT
2. PCC PAVEMENT
3. CURB
4. TREES
5. ROLLED CURB
6. CURB & GUTTER
7. UTILITY MANHOLE OR VALVE
8. FIRE HYDRANT
9. TRAFFIC SIGNAL
10. UTILITY METER OR PULLBOX
11. UTILITY POWER POLE
12. SIGN AND POST
13. CATCH BASIN
14. LIGHTS
15. BUS PAD
16. ACCESS RAMP
17. DRIVEWAY OR ALLEY
18. LANDSCAPING
19. FENCE AND/OR GATE
20. SIDEWALK
21. DROP INLET
22. UTILITY VAULT OR CABINET
23. BOLLARD
24. CURB DRAIN
25. UTILITY RISER/VENT
26. MONITORING WELL
27. CROSS-GUTTER
28. MEDIAN

DEMOLITION SYMBOLS

- REMOVE EXISTING
- REMOVE AND RELOCATE
- WORK BY OTHERS
- PROTECT IN PLACE
- ADJUST TO FINISH GRADE
- ABANDON

LEGEND

- COLD MILL EXISTING AC PAVEMENT (1.5" MIN) SEE STREET IMPROVEMENT SHEETS FOR DETAILS
- REMOVE EXISTING PCC PAVEMENT
- REMOVE EXISTING AC PAVEMENT
- REMOVE LANDSCAPING
- REMOVE MISC PCC
- 1 COLD MILL EXISTING AC PAVEMENT (4" MIN) SEE STREET IMPROVEMENT SHEETS FOR DETAILS

DEMOLITION NOTES

1. THE CONTRACTOR SHALL VERIFY THE LOCATION AND QUANTITY OF EXISTING SURFACE STRUCTURES.
2. FOR ALL EXISTING TREES, REFER TO THE TREE DISPOSITION PLAN.
3. DUST CONTROL MEASURES SHALL BE USED DURING DEMOLITION.
4. CONTRACTOR TO COORDINATE ACCESS TO DRIVEWAYS PRIOR TO DEMOLITION. EXCLUDES WORK BY OTHERS.
5. FOR RELOCATED AND ABANDONED RECLAIMED WATER FACILITIES SEE RECLAIMED WATER RELOCATION PLANS.
6. SEE THE SIGNING AND STRIPING PLANS FOR DISPOSITION OF PARKING METERS AND STREET SIGN REMOVALS.
7. SEE STORM DRAIN PLANS FOR PROPOSED RELOCATIONS AND DETAILS OF DRAINAGE FACILITIES.
8. FOR TRAFFIC SIGNAL AND COMMUNICATION EQUIPMENT SEE TRAFFIC SIGNAL AND FIBER OPTIC PLANS.
9. FOR DISPOSITION OF ELECTRICAL VAULTS AND ASSOCIATED AIR VENTS AND CABINETS, SEE COMPOSITE UTILITY REARRANGEMENT PLANS.
10. FOR DISPOSITION OF STREET LIGHTING SEE STREET LIGHTING PLANS.
11. FOR RELOCATED AND ABANDONED WATER FACILITIES AND FIRE HYDRANTS SEE WATER RELOCATION PLANS.
12. FOR RELOCATED, ABANDONED AND REMOVED SEWER FACILITIES SEE SEWER REARRANGEMENT PLANS (SEPARATE SET).
13. FOR REMOVALS WITHIN THE GUIDEWAY AREA SEE CONSTRUCTION WORK PLAN (CWP) FOR DETAILS. (SEPARATE PACKAGE)
14. THE EXACT LIMITS OF PCC REMOVALS SHALL BE TO THE NEAREST JOINT OR AS DIRECTED BY THE ENGINEER.
15. RESTORE POTHOLE LOCATION IN ACCORDANCE WITH CITY OF SANTA MONICA STANDARDS.

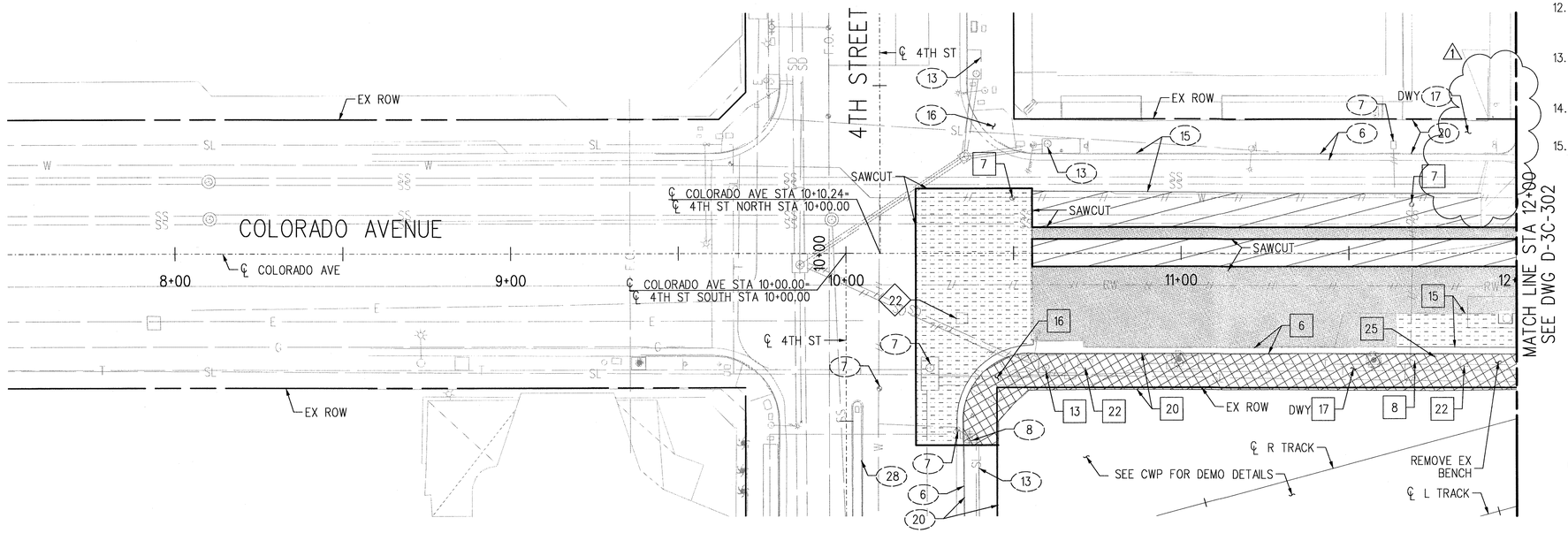

SEE STREET IMPROVEMENT PLANS FOR STREET DIMENSIONING AND GEOMETRIC LAYOUT OF WORK

SRJV
JUL 01 2014
ISSUED FOR CONSTRUCTION

Exposition Construction Authority
Approved for Construction
Drawings - AFC
JUN 30 2014

20' 10' 0 20' 40'

REV	DATE	BY	APP	REG NO	EXPIRES	SEAL HOLDER	DESCRIPTION
1	6/11/14	FH	DJA	C53031	06-30-15	DARREN J. ADRIAN	ECI 77
0	10/19/12	FH	DJA	C53031	06-30-13	DARREN J. ADRIAN	APPROVED FOR CONSTRUCTION

REVISION DATES (DESIGN STAGE ONLY)

DESIGNED BY J. GATZA
DRAWN BY J. GATZA
CHECKED BY F. HOFFMANN
IN CHARGE D. ADRIAN
DATE 10/19/12

REGISTERED PROFESSIONAL ENGINEER — DARREN J. ADRIAN — No. C53031 — Exp. 06-30-15 — CIVIL — STATE OF CALIFORNIA

Exposition Metro Line Construction Authority
Expo
444 South Flower Street
Suite 2200
Los Angeles, CA 90071
TEL (213) 443-7463
FAX (213) 362-9481
EXPO SKANSKA RADOS
PARSONS BRINCKERHOFF
Kimley-Horn and Associates, Inc. 660 SOUTH FIGUEROA STREET SUITE 1600 LOS ANGELES, CA 90017 TEL: (213) 201-6240

EXPOSITION LRT PROJECT- PHASE 2
DEMOLITION
COLORADO AVENUE
PLAN
STA 7+50 TO 12+00

CONTRACT NO XP8902-002
DRAWING NO D-3C-301 REV 1
SCALE 1"-20'
SHEET NO 15 OF 108

justin.gatza 4:47:51 PM 6/11/2014
Plot Driver=EXPO2-PDF-Full-BW.plt Pentable=EXPO2-PENTABLE.tbl C:\Users\justin.gatza\Desktop\New folder (2)\expo2-d-3c-301.plg

SCALES HORIZ SCALE: 1"-20' VERT SCALE: NO SCALE | SHEET | INDEX NUMBER

Sheet Version 2.01

REFERENCE: | SUBMITTED BY: | CITY DRAWING NO. 9302 | SHEET NO. 15 OF 108
APPROVED BY: LAURIE E. SWAN, P.E., CITY ENGINEER — ENGINEERING — DATE 6-17 2014
REVIEWED: DATE 20 | REVIEWED: DATE 20 | REVIEWED: DATE 6-17 2014 — CITY

NO.	DATE	BY	DESCRIPTION	APPROVED
			REVISIONS	

City of Santa Monica
Department of Public Works
1437 4th Street, Suite 300 Santa Monica, CA 90401
TEL. (310)458-8721 FAX. (310)393-4425
e-mail : smengineering@smgov.net

Plotted by: justin.gatza 6/11/2014 C:\Users\justin.gatza\Desktop\New folder (2)\expo2-d-3c-301.plg

EXISTING FACILITIES LEGEND

1. AC PAVEMENT
2. PCC PAVEMENT
3. CURB
4. TREES
5. ROLLED CURB
6. CURB & GUTTER
7. UTILITY MANHOLE OR VALVE
8. FIRE HYDRANT
9. TRAFFIC SIGNAL
10. UTILITY METER OR PULLBOX
11. UTILITY POWER POLE
12. SIGN AND POST
13. CATCH BASIN
14. LIGHTS
15. BUS PAD
16. ACCESS RAMP
17. DRIVEWAY OR ALLEY
18. LANDSCAPING
19. FENCE AND/OR GATE
20. SIDEWALK
21. DROP INLET
22. UTILITY VAULT OR CABINET
23. BOLLARD
24. CURB DRAIN
25. UTILITY RISER/VENT
26. MONITORING WELL
27. CROSS-GUTTER
28. MEDIAN

DEMOLITION SYMBOLS

- REMOVE EXISTING
- REMOVE AND RELOCATE
- WORK BY OTHERS
- PROTECT IN PLACE
- ADJUST TO FINISH GRADE
- ABANDON

LEGEND

- COLD MILL EXISTING AC PAVEMENT (1.5" MIN) SEE STREET IMPROVEMENT SHEETS FOR DETAILS
- REMOVE EXISTING PCC PAVEMENT
- REMOVE EXISTING AC PAVEMENT
- REMOVE LANDSCAPING
- REMOVE MISC PCC
- 1 COLD MILL EXISTING AC PAVEMENT (4" MIN) SEE STREET IMPROVEMENT SHEETS FOR DETAILS

DEMOLITION NOTES

1. THE CONTRACTOR SHALL VERIFY THE LOCATION AND QUANTITY OF EXISTING SURFACE STRUCTURES.
2. FOR ALL EXISTING TREES, REFER TO THE TREE DISPOSITION PLAN.
3. DUST CONTROL MEASURES SHALL BE USED DURING DEMOLITION.
4. CONTRACTOR TO COORDINATE ACCESS TO DRIVEWAYS PRIOR TO DEMOLITION. EXCLUDES WORK BY OTHERS.
5. FOR RELOCATED AND ABANDONED RECLAIMED WATER FACILITIES SEE RECLAIMED WATER RELOCATION PLANS.
6. SEE THE SIGNING AND STRIPING PLANS FOR DISPOSITION OF PARKING METERS AND STREET SIGN REMOVALS.
7. SEE STORM DRAIN PLANS FOR PROPOSED RELOCATIONS AND DETAILS OF DRAINAGE FACILITIES.
8. FOR TRAFFIC SIGNAL AND COMMUNICATION EQUIPMENT SEE TRAFFIC SIGNAL AND FIBER OPTIC PLANS.
9. FOR DISPOSITION OF ELECTRICAL VAULTS AND ASSOCIATED AIR VENTS AND CABINETS, SEE COMPOSITE UTILITY REARRANGEMENT PLANS.
10. FOR DISPOSITION OF STREET LIGHTING SEE STREET LIGHTING PLANS.
11. FOR RELOCATED AND ABANDONED WATER FACILITIES AND FIRE HYDRANTS SEE WATER RELOCATION PLANS.
12. FOR RELOCATED, ABANDONED AND REMOVED SEWER FACILITIES SEE SEWER REARRANGEMENT PLANS (SEPARATE SET).
13. FOR REMOVALS WITHIN THE GUIDEWAY AREA SEE CONSTRUCTION WORK PLAN (CWP) FOR DETAILS. (SEPARATE PACKAGE)
14. THE EXACT LIMITS OF PCC REMOVALS SHALL BE TO THE NEAREST JOINT OR AS DIRECTED BY THE ENGINEER.
15. RESTORE POTHOLE LOCATION IN ACCORDANCE WITH CITY OF SANTA MONICA STANDARDS.

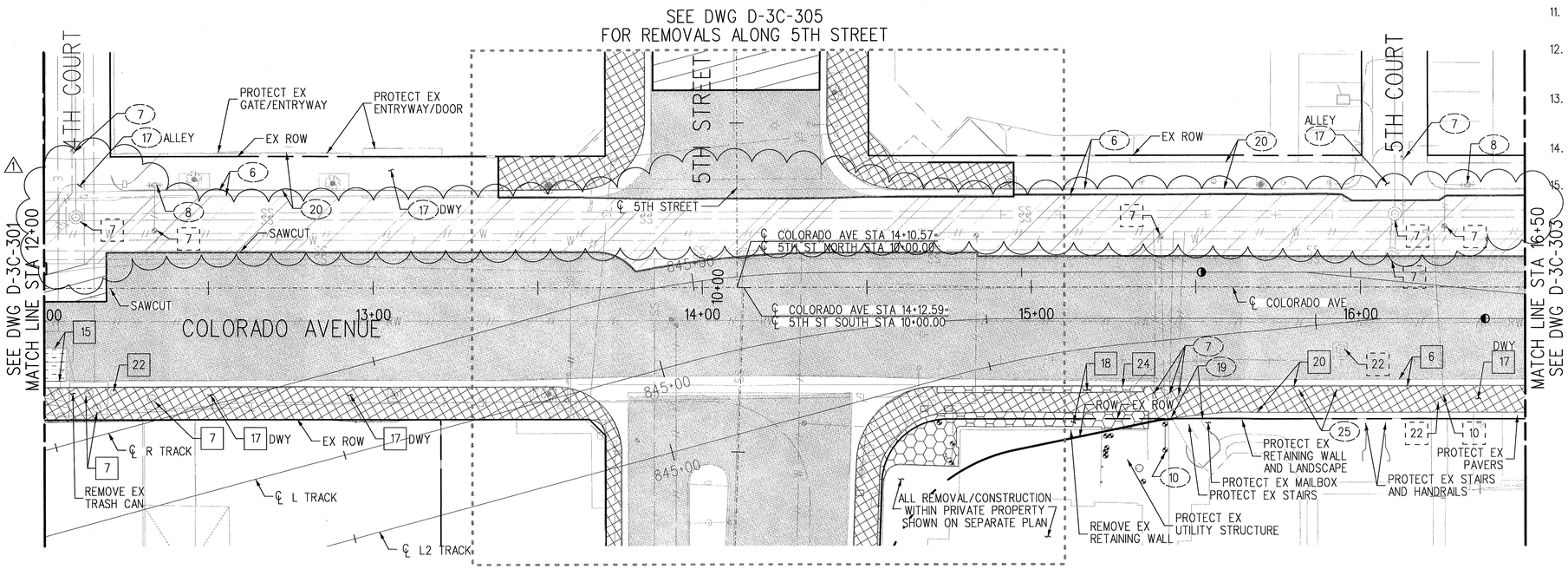

SEE STREET IMPROVEMENT PLANS FOR STREET DIMENSIONING AND GEOMETRIC LAYOUT OF WORK

SRJV
JUL 01 2014
ISSUED FOR CONSTRUCTION

Exposition Construction Authority
Approved for Construction
Drawings - AFC
JUN 30 2014

20' 10' 0 20' 40'

REV	DATE	BY	APP	REG NO	EXPIRES	SEAL HOLDER	DESCRIPTION
1	6/11/14	FH	DJA	C53031	6/30/15	DARREN J. ADRIAN	ECI 77
0	10/19/12	FH	DJA	C53031	06-30-13	DARREN J. ADRIAN	APPROVED FOR CONSTRUCTION

DESIGNED BY J. GATZA
DRAWN BY J. GATZA
CHECKED BY F. HOFFMANN
IN CHARGE D. ADRIAN
DATE 10/19/12

REGISTERED PROFESSIONAL ENGINEER DARREN J. ADRIAN No. C53031 Exp. 06-30-15 CIVIL STATE OF CALIFORNIA

Exposition Metro Line Construction Authority
Expo
EXPO SKANSKA RADOS
444 South Flower Street
Suite 2200
Los Angeles, CA 90071
TEL (213) 443-7463
FAX (213) 362-9481

PARSONS BRINCKERHOFF
Kimley-Horn and Associates, Inc.
660 SOUTH FIGUEROA STREET SUITE 1900 LOS ANGELES, CA 90017 TEL: (213) 281-4040

EXPOSITION LRT PROJECT- PHASE 2
DEMOLITION
COLORADO AVENUE
PLAN
STA 12+00 TO 16+50

CONTRACT NO XP8902-002
DRAWING NO D-3C-302
REV 1
SCALE 1"=20'
SHEET NO 16 OF 108

justin.gatza 4:47:51 PM
Plot Driver=EXPO2-PDF-Full-BW.plt
6/11/2014
Pentable=EXPO2-PENTABLE.tbl
C:\Users\justin.gatza\Desktop\New folder (2)\expo2-d-3c-302.plg

SCALES: HORIZ SCALE: 1"=20' VERT SCALE: NO SCALE
SHEET
INDEX NUMBER

REVISION DATES (DESIGN STAGE ONLY)

Sheet Version 2dl

REFERENCE:
SUBMITTED BY:
CITY DRAWING NO. 9302
SHEET NO. 16 OF 108
APPROVED BY: LEON E. SWAIN, P.E., CITY ENGINEER — ENGINEERING
DATE: 6-17 2014

REVIEWED: DATE: 20__
REVIEWED: DATE: 20__
REVIEWED: DATE: 6-17 2014 — CITY

NO.	DATE	BY	DESCRIPTION

REVISIONS — APPROVED

City of Santa Monica
Department of Public Works
1437 4th Street, Suite 300 Santa Monica, CA 90401
TEL. (310)458-8721 FAX. (310)393-4425
e-mail : smengineering@smgov.net

Plotted by: justin.gatza 6/11/2014 C:\Users\justin.gatza\Desktop\New folder (2)\expo2-d-3c-302.plg

EXISTING FACILITIES LEGEND

1. AC PAVEMENT
2. PCC PAVEMENT
3. CURB
4. TREES
5. ROLLED CURB
6. CURB & GUTTER
7. UTILITY MANHOLE OR VALVE
8. FIRE HYDRANT
9. TRAFFIC SIGNAL
10. UTILITY METER OR PULLBOX
11. UTILITY POWER POLE
12. SIGN AND POST
13. CATCH BASIN
14. LIGHTS
15. BUS PAD
16. ACCESS RAMP
17. DRIVEWAY OR ALLEY
18. LANDSCAPING
19. FENCE AND/OR GATE
20. SIDEWALK
21. DROP INLET
22. UTILITY VAULT OR CABINET
23. BOLLARD
24. CURB DRAIN
25. UTILITY RISER/VENT
26. MONITORING WELL
27. CROSS-GUTTER
28. MEDIAN

DEMOLITION SYMBOLS

- REMOVE EXISTING
- REMOVE AND RELOCATE
- WORK BY OTHERS
- PROTECT IN PLACE
- ADJUST TO FINISH GRADE
- ABANDON

LEGEND

- COLD MILL EXISTING AC PAVEMENT (1.5" MIN) SEE STREET IMPROVEMENT SHEETS FOR DETAILS
- REMOVE EXISTING PCC PAVEMENT
- REMOVE EXISTING AC PAVEMENT
- REMOVE LANDSCAPING
- REMOVE MISC PCC
- 1 COLD MILL EXISTING AC PAVEMENT (4" MIN) SEE STREET IMPROVEMENT SHEETS FOR DETAILS

DEMOLITION NOTES

1. THE CONTRACTOR SHALL VERIFY THE LOCATION AND QUANTITY OF EXISTING SURFACE STRUCTURES.
2. FOR ALL EXISTING TREES, REFER TO THE TREE DISPOSITION PLAN.
3. DUST CONTROL MEASURES SHALL BE USED DURING DEMOLITION.
4. CONTRACTOR TO COORDINATE ACCESS TO DRIVEWAYS PRIOR TO DEMOLITION. EXCLUDES WORK BY OTHERS.
5. FOR RELOCATED AND ABANDONED RECLAIMED WATER FACILITIES SEE RECLAIMED WATER RELOCATION PLANS.
6. SEE THE SIGNING AND STRIPING PLANS FOR DISPOSITION OF PARKING METERS AND STREET SIGN REMOVALS.
7. SEE STORM DRAIN PLANS FOR PROPOSED RELOCATIONS AND DETAILS OF DRAINAGE FACILITIES.
8. FOR TRAFFIC SIGNAL AND COMMUNICATION EQUIPMENT SEE TRAFFIC SIGNAL AND FIBER OPTIC PLANS.
9. FOR DISPOSITION OF ELECTRICAL VAULTS AND ASSOCIATED AIR VENTS AND CABINETS, SEE COMPOSITE UTILITY REARRANGEMENT PLANS.
10. FOR DISPOSITION OF STREET LIGHTING SEE STREET LIGHTING PLANS.
11. FOR RELOCATED AND ABANDONED WATER FACILITIES AND FIRE HYDRANTS SEE WATER RELOCATION PLANS.
12. FOR RELOCATED, ABANDONED AND REMOVED SEWER FACILITIES SEE SEWER REARRANGEMENT PLANS (SEPARATE SET).
13. FOR REMOVALS WITHIN THE GUIDEWAY AREA SEE CONSTRUCTION WORK PLAN (CWP) FOR DETAILS. (SEPARATE PACKAGE)
14. THE EXACT LIMITS OF PCC REMOVALS SHALL BE TO THE NEAREST JOINT OR AS DIRECTED BY THE ENGINEER.
15. RESTORE POTHOLE LOCATION IN ACCORDANCE WITH CITY OF SANTA MONICA STANDARDS.

SEE DWG D-3C-306 FOR REMOVALS ALONG 6TH STREET

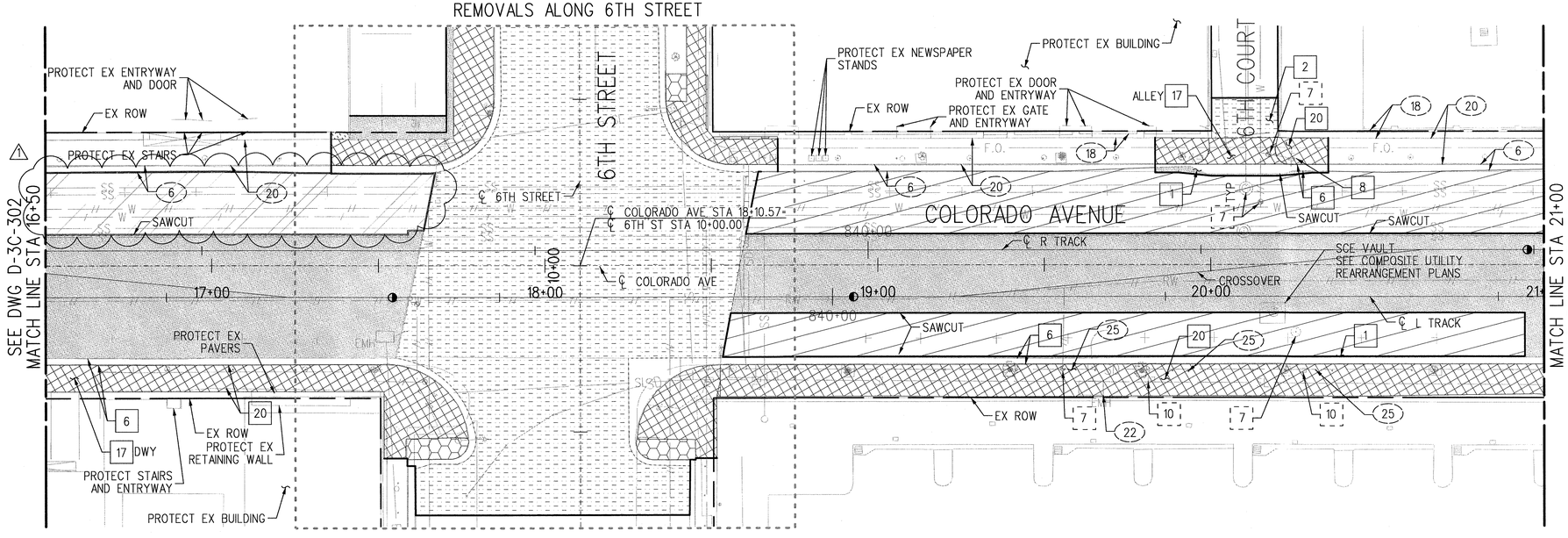

SEE STREET IMPROVEMENT PLANS FOR STREET DIMENSIONING AND GEOMETRIC LAYOUT OF WORK

SRJV
JUL 01 2014
ISSUED FOR CONSTRUCTION

Exposition Construction Authority
Approved for Construction
Drawings - AFC
JUN 30 2014

20' 10' 0 20' 40'

REV	DATE	BY	APP	REG NO	EXPIRES	SEAL HOLDER	DESCRIPTION
1	6/11/13	FH	DJA	C53031	6/30/15	DARREN J. ADRIAN	ECI 77
0	10/19/12	FH	DJA	C53031	06-30-13	DARREN J. ADRIAN	APPROVED FOR CONSTRUCTION

REVISION DATES (DESIGN STAGE ONLY)

DESIGNED BY J. GATZA
DRAWN BY J. GATZA
CHECKED BY F. HOFFMANN
IN CHARGE D. ADRIAN
DATE 10/19/12

REGISTERED PROFESSIONAL ENGINEER — DARREN J. ADRIAN — No. C53031 — Exp. 06-30-15 — CIVIL — STATE OF CALIFORNIA

Exposition Metro Line Construction Authority
Expo
EXPO SKANSKA RADOS
444 South Flower Street
Suite 2200
Los Angeles, CA 90071
TEL (213) 443-7463
FAX (213) 362-9481

PARSONS BRINCKERHOFF
Kimley-Horn and Associates, Inc.
860 SOUTH FIGUEROA STREET SUITE 1625 Los Angeles, CA 90017 TEL: (213) 261-9440

EXPOSITION LRT PROJECT- PHASE 2
DEMOLITION
COLORADO AVENUE
PLAN
STA 16+50 TO 21+00

CONTRACT NO XP8902-002
DRAWING NO D-3C-303 REV 1
SCALE 1"=20'
SHEET NO 17 OF 108

justin.gatza 4:47:52 PM 6/11/2014
Plot Driver=EXPO2-PDF-Full-BW.plt
Pentable=EXPO2-PENTABLE.tbl
C:\Users\justin.gatza\Desktop\New folder (2)\expo2-d-3c-303.plg

SCALES: HORIZ SCALE: 1"=20' VERT SCALE: NO SCALE
SHEET
INDEX NUMBER

Sheet Version 2.01

NO.	DATE	BY	DESCRIPTION	APPROVED
			REVISIONS	CITY

REFERENCE:
SUBMITTED BY:
CITY DRAWING NO. 9302
SHEET NO. 17 OF 108
APPROVED BY: LEON E. SWAIN, P.E., CITY ENGINEER — ENGINEERING — DATE 6-17 2014
REVIEWED: DATE 20__
REVIEWED: DATE 20__
REVIEWED: DATE 6-17 2014

City of Santa Monica
Department of Public Works
1437 4th Street, Suite 300 Santa Monica, CA 90401
TEL. (310)458-8721 FAX. (310)393-4425
e-mail: smengineering@smgov.net

Plotted by: justin.gatza 6/11/2014 C:\Users\justin.gatza\Desktop\New folder (2)\expo2-d-3c-303.plg

EXISTING FACILITIES LEGEND

1. AC PAVEMENT
2. PCC PAVEMENT
3. CURB
4. TREES
5. ROLLED CURB
6. CURB & GUTTER
7. UTILITY MANHOLE OR VALVE
8. FIRE HYDRANT
9. TRAFFIC SIGNAL
10. UTILITY METER OR PULLBOX
11. UTILITY POWER POLE
12. SIGN AND POST
13. CATCH BASIN
14. LIGHTS
15. BUS PAD
16. ACCESS RAMP
17. DRIVEWAY OR ALLEY
18. LANDSCAPING
19. FENCE AND/OR GATE
20. SIDEWALK
21. DROP INLET
22. UTILITY VAULT OR CABINET
23. BOLLARD
24. CURB DRAIN
25. UTILITY RISER/VENT
26. MONITORING WELL
27. CROSS-GUTTER
28. MEDIAN

DEMOLITION SYMBOLS

- REMOVE EXISTING
- REMOVE AND RELOCATE
- WORK BY OTHERS
- PROTECT IN PLACE
- ADJUST TO FINISH GRADE
- ABANDON

LEGEND

- COLD MILL EXISTING AC PAVEMENT (1.5" MIN) SEE STREET IMPROVEMENT SHEETS FOR DETAILS
- REMOVE EXISTING PCC PAVEMENT
- REMOVE EXISTING AC PAVEMENT
- REMOVE LANDSCAPING
- REMOVE MISC PCC
- COLD MILL EXISTING AC PAVEMENT (4" MIN) SEE STREET IMPROVEMENT SHEETS FOR DETAILS

DEMOLITION NOTES

1. THE CONTRACTOR SHALL VERIFY THE LOCATION AND QUANTITY OF EXISTING SURFACE STRUCTURES.
2. FOR ALL EXISTING TREES, REFER TO THE TREE DISPOSITION PLAN.
3. DUST CONTROL MEASURES SHALL BE USED DURING DEMOLITION.
4. CONTRACTOR TO COORDINATE ACCESS TO DRIVEWAYS PRIOR TO DEMOLITION. EXCLUDES WORK BY OTHERS.
5. FOR RELOCATED AND ABANDONED RECLAIMED WATER FACILITIES SEE RECLAIMED WATER RELOCATION PLANS.
6. SEE THE SIGNING AND STRIPING PLANS FOR DISPOSITION OF PARKING METERS AND STREET SIGN REMOVALS.
7. SEE STORM DRAIN PLANS FOR PROPOSED RELOCATIONS AND DETAILS OF DRAINAGE FACILITIES.
8. FOR TRAFFIC SIGNAL AND COMMUNICATION EQUIPMENT SEE TRAFFIC SIGNAL AND FIBER OPTIC PLANS.
9. FOR DISPOSITION OF ELECTRICAL VAULTS AND ASSOCIATED AIR VENTS AND CABINETS, SEE COMPOSITE UTILITY REARRANGEMENT PLANS.
10. FOR DISPOSITION OF STREET LIGHTING SEE STREET LIGHTING PLANS.
11. FOR RELOCATED AND ABANDONED WATER FACILITIES AND FIRE HYDRANTS SEE WATER RELOCATION PLANS.
12. FOR RELOCATED, ABANDONED AND REMOVED SEWER FACILITIES SEE SEWER REARRANGEMENT PLANS (SEPARATE SET).
13. FOR REMOVALS WITHIN THE GUIDEWAY AREA SEE CONSTRUCTION WORK PLAN (CWP) FOR DETAILS. (SEPARATE PACKAGE)
14. THE EXACT LIMITS OF PCC REMOVALS SHALL BE TO THE NEAREST JOINT OR AS DIRECTED BY THE ENGINEER.
15. RESTORE POTHOLE LOCATION IN ACCORDANCE WITH CITY OF SANTA MONICA STANDARDS.

SEE DWG D-3C-307 FOR REMOVALS ALONG 7TH STREET

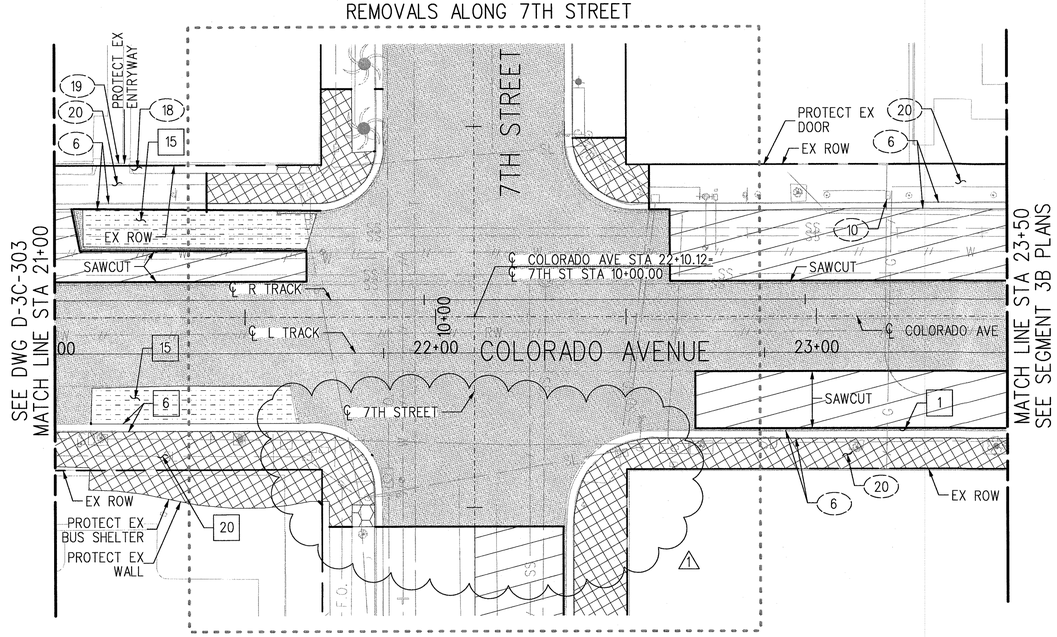

SEE STREET IMPROVEMENT PLANS FOR STREET DIMENSIONING AND GEOMETRIC LAYOUT OF WORK

SRJV
SEP 04 2014
ISSUED FOR CONSTRUCTION

20' 10' 0 20' 40'

REV	DATE	BY	APP	REG NO	EXPIRES	SEAL HOLDER	DESCRIPTION
1	7/11/14	FH	DJA	C53031	06-30-15	DARREN J. ADRIAN	ECI 118
0	10/19/12	FH	DJA	C53031	06-30-13	DARREN J. ADRIAN	APPROVED FOR CONSTRUCTION

REVISION DATES (DESIGN STAGE ONLY)

DESIGNED BY J. GATZA
DRAWN BY J. GATZA
CHECKED BY F. HOFFMANN
IN CHARGE D. ADRIAN
DATE 10/19/12

REGISTERED PROFESSIONAL ENGINEER DARREN J. ADRIAN No. C53031 Exp. 06-30-15 CIVIL STATE OF CALIFORNIA

Exposition Metro Line Construction Authority
Expo
444 South Flower Street
Suite 2200
Los Angeles, CA 90071
TEL (213) 443-7463
FAX (213) 362-9481
EXPO SKANSKA RADOS
PARSONS BRINCKERHOFF
Kimley-Horn and Associates, Inc. 660 SOUTH FIGUEROA STREET SUITE 1945 LOS ANGELES, CA 90017 TEL (213) 261-1042

EXPOSITION LRT PROJECT- PHASE 2
DEMOLITION
COLORADO AVENUE
PLAN
STA 21+00 TO 23+50

Exposition Construction Authority Approved for Construction Drawings - AFC
SEP 02 2014

CONTRACT NO XP8902-002
DRAWING NO D-3C-304
REV 1
SCALE 1"=20'
SHEET NO 18 OF 108

justin.gatza 11:50:09 AM 7/11/2014
Plot Driver=EXPO2-PDF-Full-BW.plt Pentable=EXPO2-PENTABLE.tbl C:\Users\justin.gatza\Desktop\EXPORT\expo2-d-3c-304.plg

SCALES HORIZ SCALE: 1"=20' VERT SCALE: NO SCALE
SHEET
INDEX NUMBER

Sheet Version 2.01

CITY DRAWING NO. 9302
SHEET NO. 18 OF 108
DATE: 9/25 2014
APPROVED BY: LEON E. SWANN, P.E., CITY ENGINEER
ENGINEERING
REFERENCE:
SUBMITTED BY:
REVIEWED: DATE: 20__
REVIEWED: DATE: 9/24 2014
REVIEWED: DATE: 9/29 2014
CITY
APPROVED
REVISIONS
NO. DATE BY DESCRIPTION

City of Santa Monica
Department of Public Works
1437 4th Street, Suite 300 Santa Monica, CA 90401
TEL. (310)458-8721 FAX. (310)393-4425
e-mail : smengineering@smgov.net

Plotted by: justin.gatza 7/11/2014 C:\Users\justin.gatza\Desktop\EXPORT\expo2-d-3c-304.plg

EXISTING FACILITIES LEGEND

1. AC PAVEMENT
2. PCC PAVEMENT
3. CURB
4. TREES
5. ROLLED CURB
6. CURB & GUTTER
7. UTILITY MANHOLE OR VALVE
8. FIRE HYDRANT
9. TRAFFIC SIGNAL
10. UTILITY METER OR PULLBOX
11. UTILITY POWER POLE
12. SIGN AND POST
13. CATCH BASIN
14. LIGHTS
15. BUS PAD
16. ACCESS RAMP
17. DRIVEWAY OR ALLEY
18. LANDSCAPING
19. FENCE AND/OR GATE
20. SIDEWALK
21. DROP INLET
22. UTILITY VAULT OR CABINET
23. BOLLARD
24. CURB DRAIN
25. UTILITY RISER/VENT
26. MONITORING WELL
27. CROSS-GUTTER
28. MEDIAN

DEMOLITION SYMBOLS

- REMOVE EXISTING
- REMOVE AND RELOCATE
- WORK BY OTHERS
- PROTECT IN PLACE
- ADJUST TO FINISH GRADE
- ABANDON

LEGEND

- COLD MILL EXISTING AC PAVEMENT (1.5" MIN) SEE STREET IMPROVEMENT SHEETS FOR DETAILS
- REMOVE EXISTING PCC PAVEMENT
- REMOVE EXISTING AC PAVEMENT
- REMOVE LANDSCAPING
- REMOVE MISC PCC
- 1 COLD MILL EXISTING AC PAVEMENT (4" MIN) SEE STREET IMPROVEMENT SHEETS FOR DETAILS

DEMOLITION NOTES

1. THE CONTRACTOR SHALL VERIFY THE LOCATION AND QUANTITY OF EXISTING SURFACE STRUCTURES.
2. FOR ALL EXISTING TREES, REFER TO THE TREE DISPOSITION PLAN.
3. DUST CONTROL MEASURES SHALL BE USED DURING DEMOLITION.
4. CONTRACTOR TO COORDINATE ACCESS TO DRIVEWAYS PRIOR TO DEMOLITION. EXCLUDES WORK BY OTHERS.
5. FOR RELOCATED AND ABANDONED RECLAIMED WATER FACILITIES SEE RECLAIMED WATER RELOCATION PLANS.
6. SEE THE SIGNING AND STRIPING PLANS FOR DISPOSITION OF PARKING METERS AND STREET SIGN REMOVALS.
7. SEE STORM DRAIN PLANS FOR PROPOSED RELOCATIONS AND DETAILS OF DRAINAGE FACILITIES.
8. FOR TRAFFIC SIGNAL AND COMMUNICATION EQUIPMENT SEE TRAFFIC SIGNAL AND FIBER OPTIC PLANS.
9. FOR DISPOSITION OF ELECTRICAL VAULTS AND ASSOCIATED AIR VENTS AND CABINETS, SEE COMPOSITE UTILITY REARRANGEMENT PLANS.
10. FOR DISPOSITION OF STREET LIGHTING SEE STREET LIGHTING PLANS.
11. FOR RELOCATED AND ABANDONED WATER FACILITIES AND FIRE HYDRANTS SEE WATER RELOCATION PLANS.
12. FOR RELOCATED, ABANDONED AND REMOVED SEWER FACILITIES SEE SEWER REARRANGEMENT PLANS (SEPARATE SET).
13. FOR REMOVALS WITHIN THE GUIDEWAY AREA SEE CONSTRUCTION WORK PLAN (CWP) FOR DETAILS. (SEPARATE PACKAGE)
14. THE EXACT LIMITS OF PCC REMOVALS SHALL BE TO THE NEAREST JOINT OR AS DIRECTED BY THE ENGINEER.
15. RESTORE POTHOLE LOCATION IN ACCORDANCE WITH CITY OF SANTA MONICA STANDARDS.

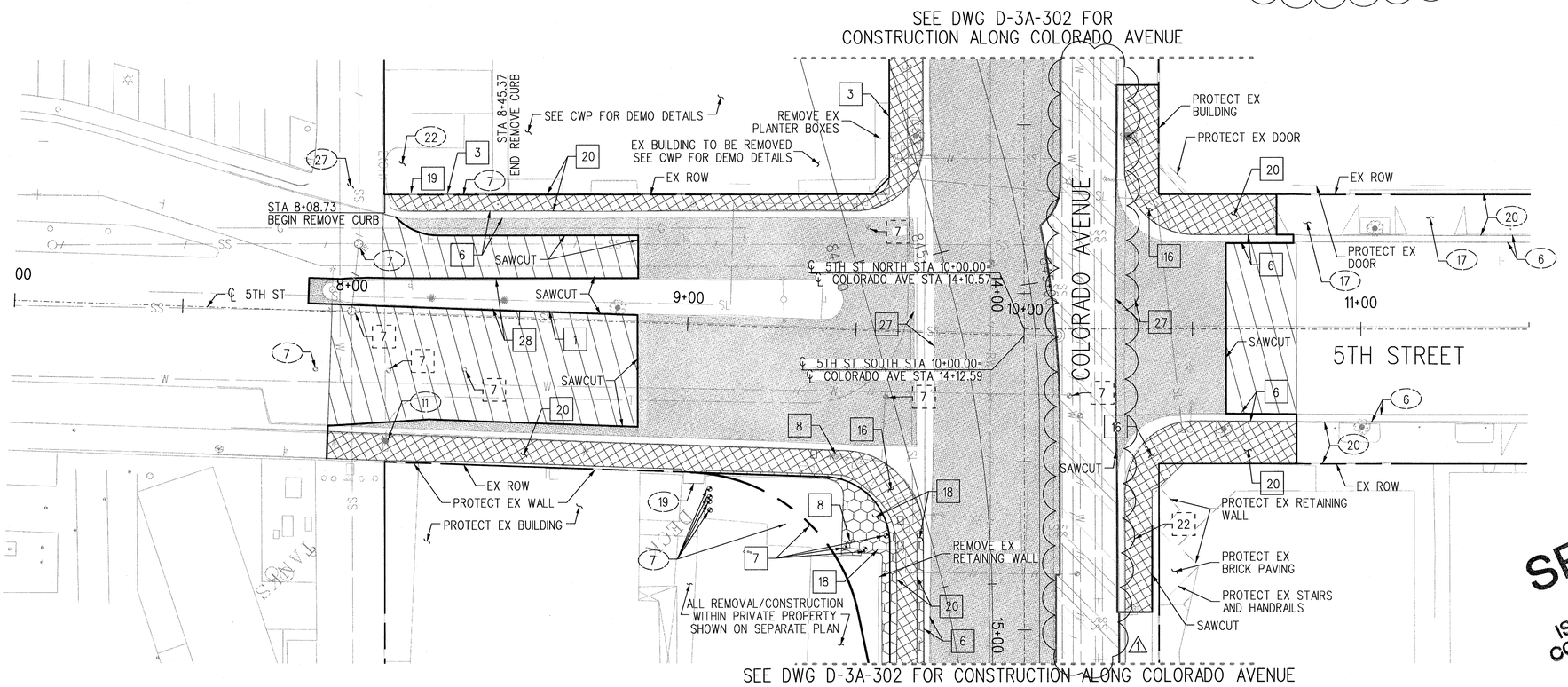

SEE STREET IMPROVEMENT PLANS FOR STREET DIMENSIONING AND GEOMETRIC LAYOUT OF WORK

SRJV JUL 01 2014 ISSUED FOR CONSTRUCTION

Exposition Construction Authority Approved for Construction Drawings - AFC JUN 30 2014

20' 10' 0 20' 40'

REV	DATE	BY	APP	REG NO	EXPIRES	SEAL HOLDER	DESCRIPTION
1	6/11/14	FH	DJA	C53031	6/30/15	DARREN J. ADRIAN	ECI 77
0	10/19/12	FH	DJA	C53031	06-30-13	DARREN J. ADRIAN	APPROVED FOR CONSTRUCTION

REVISION DATES (DESIGN STAGE ONLY)

DESIGNED BY J. GATZA
DRAWN BY J. GATZA
CHECKED BY F. HOFFMANN
IN CHARGE D. ADRIAN
DATE 10/19/12

REGISTERED PROFESSIONAL ENGINEER DARREN J. ADRIAN No. C53031 Exp. 06-30-15 CIVIL STATE OF CALIFORNIA

Exposition Metro Line Construction Authority
Expo
EXPO SKANSKA RADOS
444 South Flower Street
Suite 2200
Los Angeles, CA 90071
TEL (213) 443-7463
FAX (213) 362-9481

PARSONS BRINCKERHOFF
Kinder Morgan Lund Associates, Inc
660 SOUTH FIGUEROA STREET SUITE 1000 LOS ANGELES, CA 90017 TEL: (213) 281-4040

DOCUMENT STATUS

EXPOSITION LRT PROJECT- PHASE 2
DEMOLITION
5TH STREET
PLAN
STA 7+00 to 11+50

CONTRACT NO XP8902-002
DRAWING NO D-3C-305 REV 1
SCALE 1"=20'
SHEET NO 19 OF 108

SCALES: HORIZ SCALE: 1"=20' VERT SCALE: NO SCALE
SHEET
INDEX NUMBER

justin.gatza 4:47:52 PM 6/11/2014
Plot Driver=EXPO2-PDF-Full-BW.plt Pentable=EXPO2-PENTABLE.tbl C:\Users\justin.gatza\Desktop\New folder (2)\expo2-d-3c-305.plg

Sheet Version 2.01

REFERENCE: SUBMITTED BY: CITY DRAWING NO. 9302 SHEET NO. 19 OF 108 DATE: 6-17 2014
APPROVED BY: LEON E. SIMON, P.E., CITY ENGINEER ENGINEERING
REVIEWED: DATE: 20 REVIEWED: DATE: 20 REVIEWED: DATE: 6-17 2014 CITY

NO.	DATE	BY	DESCRIPTION	APPROVED

REVISIONS

City of Santa Monica
Department of Public Works
1437 4th Street, Suite 300 Santa Monica, CA 90401
TEL. (310)458-8721 FAX. (310)393-4425
e-mail : smengineering@smgov.net

Plotted by: justin.gatza 6/11/2014 C:\Users\justin.gatza\Desktop\New folder (2)\expo2-d-3c-305.plg

EXISTING FACILITIES LEGEND

1. AC PAVEMENT
2. PCC PAVEMENT
3. CURB
4. TREES
5. ROLLED CURB
6. CURB & GUTTER
7. UTILITY MANHOLE OR VALVE
8. FIRE HYDRANT
9. TRAFFIC SIGNAL
10. UTILITY METER OR PULLBOX
11. UTILITY POWER POLE
12. SIGN AND POST
13. CATCH BASIN
14. LIGHTS
15. BUS PAD
16. ACCESS RAMP
17. DRIVEWAY OR ALLEY
18. LANDSCAPING
19. FENCE AND/OR GATE
20. SIDEWALK
21. DROP INLET
22. UTILITY VAULT OR CABINET
23. BOLLARD
24. CURB DRAIN
25. UTILITY RISER/VENT
26. MONITORING WELL
27. CROSS-GUTTER
28. MEDIAN

DEMOLITION SYMBOLS

- REMOVE EXISTING
- REMOVE AND RELOCATE
- WORK BY OTHERS
- PROTECT IN PLACE
- ADJUST TO FINISH GRADE
- ABANDON

LEGEND

- COLD MILL EXISTING AC PAVEMENT (1.5" MIN) SEE STREET IMPROVEMENT SHEETS FOR DETAILS
- REMOVE EXISTING PCC PAVEMENT
- REMOVE EXISTING AC PAVEMENT
- REMOVE LANDSCAPING
- REMOVE MISC PCC
- 1 COLD MILL EXISTING AC PAVEMENT (4" MIN) SEE STREET IMPROVEMENT SHEETS FOR DETAILS

DEMOLITION NOTES

1. THE CONTRACTOR SHALL VERIFY THE LOCATION AND QUANTITY OF EXISTING SURFACE STRUCTURES.
2. FOR ALL EXISTING TREES, REFER TO THE TREE DISPOSITION PLAN.
3. DUST CONTROL MEASURES SHALL BE USED DURING DEMOLITION.
4. CONTRACTOR TO COORDINATE ACCESS TO DRIVEWAYS PRIOR TO DEMOLITION. EXCLUDES WORK BY OTHERS.
5. FOR RELOCATED AND ABANDONED RECLAIMED WATER FACILITIES SEE RECLAIMED WATER RELOCATION PLANS.
6. SEE THE SIGNING AND STRIPING PLANS FOR DISPOSITION OF PARKING METERS AND STREET SIGN REMOVALS.
7. SEE STORM DRAIN PLANS FOR PROPOSED RELOCATIONS AND DETAILS OF DRAINAGE FACILITIES.
8. FOR TRAFFIC SIGNAL AND COMMUNICATION EQUIPMENT SEE TRAFFIC SIGNAL AND FIBER OPTIC PLANS.
9. FOR DISPOSITION OF ELECTRICAL VAULTS AND ASSOCIATED AIR VENTS AND CABINETS, SEE COMPOSITE UTILITY REARRANGEMENT PLANS.
10. FOR DISPOSITION OF STREET LIGHTING SEE STREET LIGHTING PLANS.
11. FOR RELOCATED AND ABANDONED WATER FACILITIES AND FIRE HYDRANTS SEE WATER RELOCATION PLANS.
12. FOR RELOCATED, ABANDONED AND REMOVED SEWER FACILITIES SEE SEWER REARRANGEMENT PLANS (SEPARATE SET).
13. FOR REMOVALS WITHIN THE GUIDEWAY AREA SEE CONSTRUCTION WORK PLAN (CWP) FOR DETAILS. (SEPARATE PACKAGE)
14. THE EXACT LIMITS OF PCC REMOVALS SHALL BE TO THE NEAREST JOINT OR AS DIRECTED BY THE ENGINEER.
15. RESTORE POTHOLE LOCATION IN ACCORDANCE WITH CITY OF SANTA MONICA STANDARDS.

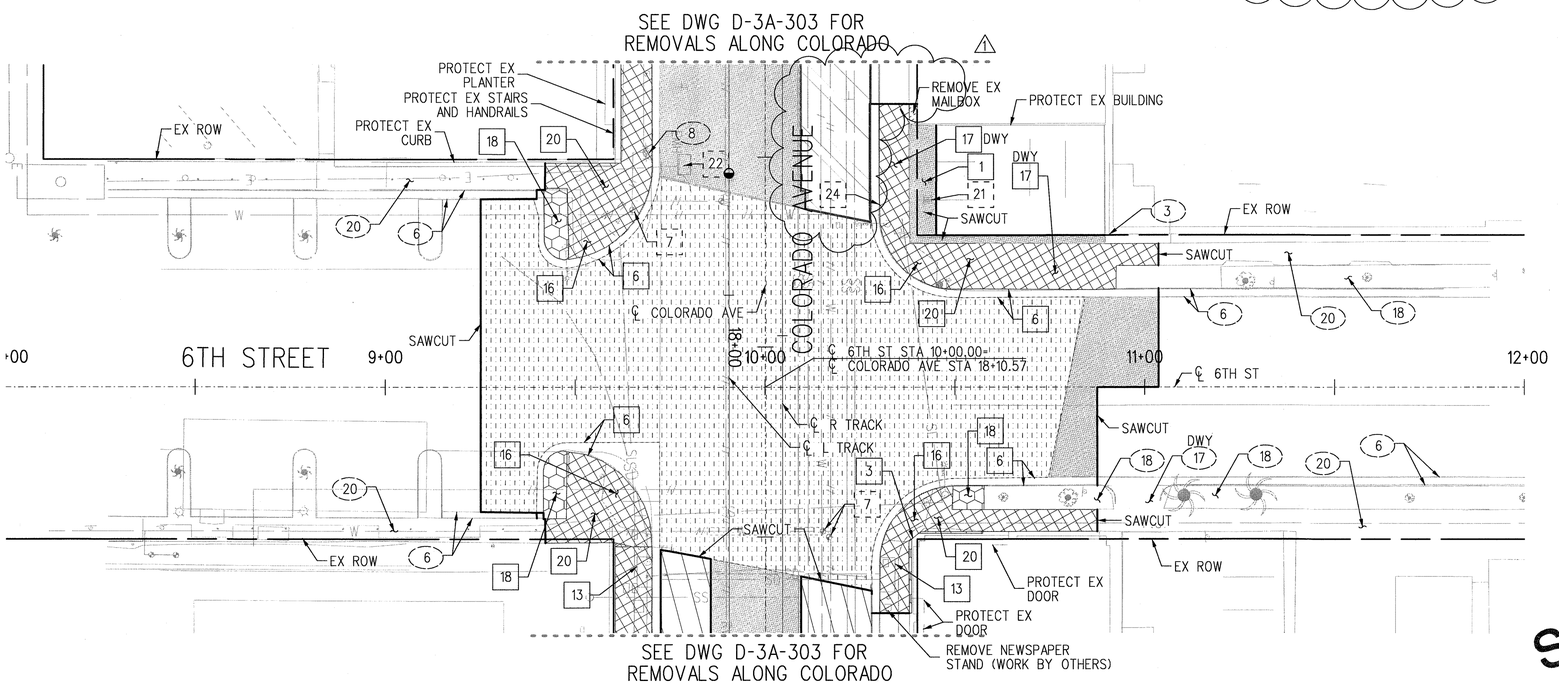

SEE STREET IMPROVEMENT PLANS FOR STREET DIMENSIONING AND GEOMETRIC LAYOUT OF WORK

SRJV
JUL 01 2014
ISSUED FOR CONSTRUCTION

Exposition Construction Authority
Approved for Construction
Drawings - AFC
JUN 30 2014

20' 10' 0 20' 40'

REV	DATE	BY	APP	REG NO	EXPIRES	SEAL HOLDER	DESCRIPTION
1	6/11/14	FH	DJA	C53031	6/30/15	DARREN J. ADRIAN	ECI 77
0	10/19/12	FH	DJA	C53031	06-30-13	DARREN J. ADRIAN	APPROVED FOR CONSTRUCTION

REVISION DATES (DESIGN STAGE ONLY)

DESIGNED BY J. GATZA
DRAWN BY J. GATZA
CHECKED BY F. HOFFMANN
IN CHARGE D. ADRIAN
DATE 10/19/12

REGISTERED PROFESSIONAL ENGINEER DARREN J. ADRIAN No. C53031 Exp. 06-30-15 CIVIL STATE OF CALIFORNIA

Exposition Metro Line Construction Authority
Expo
444 South Flower Street
Suite 2200
Los Angeles, CA 90071
TEL (213) 443-7463
FAX (213) 362-9481

EXPO SKANSKA RADOS

PARSONS BRINCKERHOFF

Kimley-Horn and Associates, Inc. 660 SOUTH FIGUEROA STREET SUITE 1400 LOS ANGELES, CA 90017 TEL: (213) 341-6040

EXPOSITION LRT PROJECT- PHASE 2
DEMOLITION
6TH STREET
PLAN
STA 8+00 TO 12+00

CONTRACT NO XP8902-002
DRAWING NO D-3C-306
REV 1
SCALE 1"=20'
SHEET NO 20 OF 108

justin.gatza 4:47:53 PM 6/11/2014
Plot Driver=EXPO2-PDF-Full-BW.plt
Pentable=EXPO2-PENTABLE.tbl
C:\Users\justin.gatza\Desktop\New folder (2)\expo2-d-3c-306.plg

SCALES: HORIZ SCALE: 1"=20' VERT SCALE: NO SCALE
SHEET
INDEX NUMBER

Sheet Version 2.01

REFERENCE:
SUBMITTED BY:
CITY DRAWING NO. 9302
SHEET NO: 20 OF 108
APPROVED BY: LEON E. SWAIN, P.E., CITY ENGINEER — ENGINEERING
DATE: 6-17 2014

REVIEWED: DATE: 20__
REVIEWED: DATE: 20__
REVIEWED: DATE: 6-17 2014 — CITY

NO.	DATE	BY	DESCRIPTION
			REVISIONS

APPROVED

City of Santa Monica
Department of Public Works
1437 4th Street, Suite 300 Santa Monica, CA 90401
TEL. (310)458-8721 FAX. (310)393-4425
e-mail : smengineering@smgov.net

Plotted by: justin.gatza 6/11/2014 C:\Users\justin.gatza\Desktop\New folder (2)\expo2-d-3c-306.plg

EXISTING FACILITIES LEGEND

1. AC PAVEMENT
2. PCC PAVEMENT
3. CURB
4. TREES
5. ROLLED CURB
6. CURB & GUTTER
7. UTILITY MANHOLE OR VALVE
8. FIRE HYDRANT
9. TRAFFIC SIGNAL
10. UTILITY METER OR PULLBOX
11. UTILITY POWER POLE
12. SIGN AND POST
13. CATCH BASIN
14. LIGHTS
15. BUS PAD
16. ACCESS RAMP
17. DRIVEWAY OR ALLEY
18. LANDSCAPING
19. FENCE AND/OR GATE
20. SIDEWALK
21. DROP INLET
22. UTILITY VAULT OR CABINET
23. BOLLARD
24. CURB DRAIN
25. UTILITY RISER/VENT
26. MONITORING WELL
27. CROSS-GUTTER
28. MEDIAN

DEMOLITION SYMBOLS

- REMOVE EXISTING
- REMOVE AND RELOCATE
- WORK BY OTHERS
- PROTECT IN PLACE
- ADJUST TO FINISH GRADE
- ABANDON

LEGEND

- COLD MILL EXISTING AC PAVEMENT (1.5" MIN) SEE STREET IMPROVEMENT SHEETS FOR DETAILS
- REMOVE EXISTING PCC PAVEMENT
- REMOVE EXISTING AC PAVEMENT
- REMOVE LANDSCAPING
- REMOVE MISC PCC
- COLD MILL EXISTING AC PAVEMENT (4" MIN) SEE STREET IMPROVEMENT SHEETS FOR DETAILS

DEMOLITION NOTES

1. THE CONTRACTOR SHALL VERIFY THE LOCATION AND QUANTITY OF EXISTING SURFACE STRUCTURES.
2. FOR ALL EXISTING TREES, REFER TO THE TREE DISPOSITION PLAN.
3. DUST CONTROL MEASURES SHALL BE USED DURING DEMOLITION.
4. CONTRACTOR TO COORDINATE ACCESS TO DRIVEWAYS PRIOR TO DEMOLITION. EXCLUDES WORK BY OTHERS.
5. FOR RELOCATED AND ABANDONED RECLAIMED WATER FACILITIES SEE RECLAIMED WATER RELOCATION PLANS.
6. SEE THE SIGNING AND STRIPING PLANS FOR DISPOSITION OF PARKING METERS AND STREET SIGN REMOVALS.
7. SEE STORM DRAIN PLANS FOR PROPOSED RELOCATIONS AND DETAILS OF DRAINAGE FACILITIES.
8. FOR TRAFFIC SIGNAL AND COMMUNICATION EQUIPMENT SEE TRAFFIC SIGNAL AND FIBER OPTIC PLANS.
9. FOR DISPOSITION OF ELECTRICAL VAULTS AND ASSOCIATED AIR VENTS AND CABINETS, SEE COMPOSITE UTILITY REARRANGEMENT PLANS.
10. FOR DISPOSITION OF STREET LIGHTING SEE STREET LIGHTING PLANS.
11. FOR RELOCATED AND ABANDONED WATER FACILITIES AND FIRE HYDRANTS SEE WATER RELOCATION PLANS.
12. FOR RELOCATED, ABANDONED AND REMOVED SEWER FACILITIES SEE SEWER REARRANGEMENT PLANS (SEPARATE SET).
13. FOR REMOVALS WITHIN THE GUIDEWAY AREA SEE CONSTRUCTION WORK PLAN (CWP) FOR DETAILS. (SEPARATE PACKAGE)
14. THE EXACT LIMITS OF PCC REMOVALS SHALL BE TO THE NEAREST JOINT OR AS DIRECTED BY THE ENGINEER.
15. RESTORE POTHOLE LOCATION IN ACCORDANCE WITH CITY OF SANTA MONICA STANDARDS.

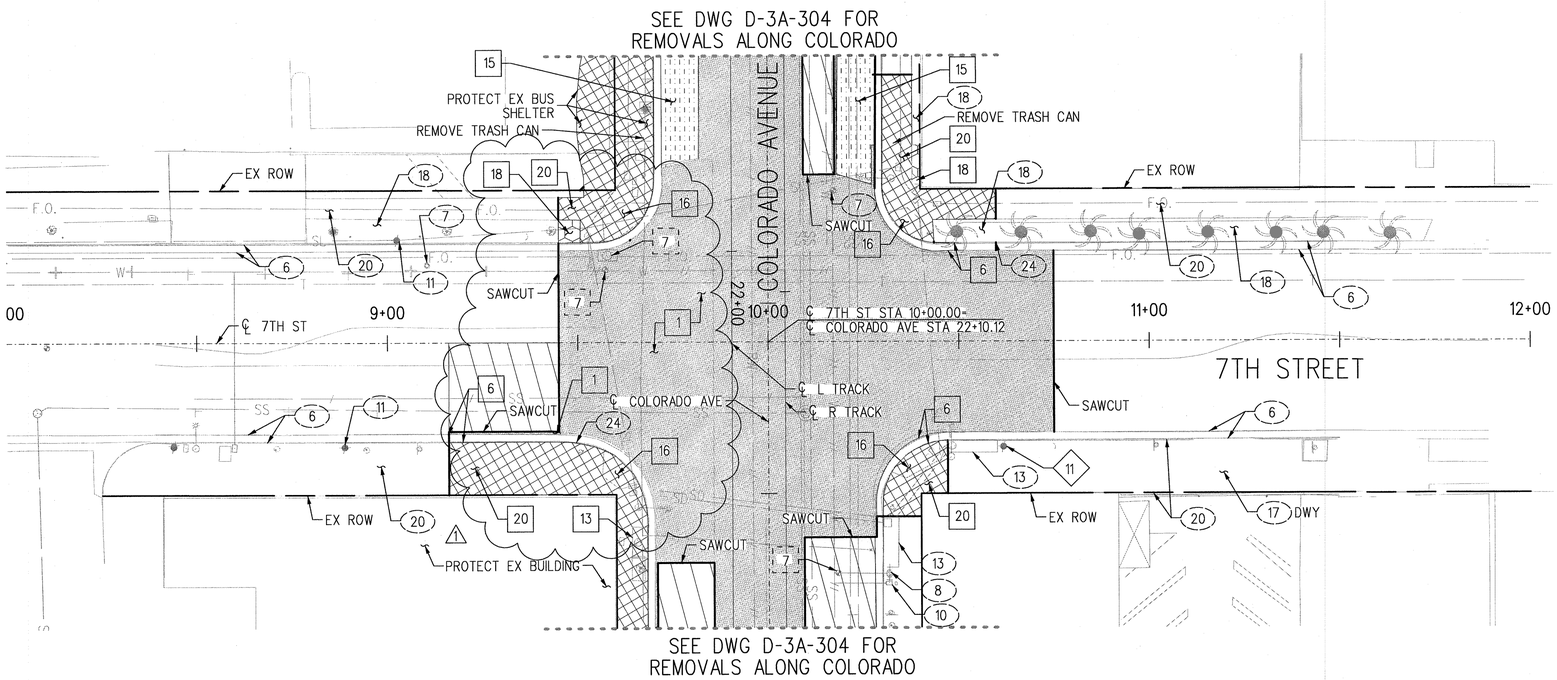

SEE STREET IMPROVEMENT PLANS FOR STREET DIMENSIONING AND GEOMETRIC LAYOUT OF WORK

SRJV
SEP 04 2014
ISSUED FOR CONSTRUCTION

20' 10' 0 20' 40'

REV	DATE	BY	APP	REG NO	EXPIRES	SEAL HOLDER	DESCRIPTION
1	7/11/14	FH	DJA	C53031	06-30-15	DARREN J. ADRIAN	ECI 118
0	10/19/12	FH	DJA	C53031	06-30-13	DARREN J. ADRIAN	APPROVED FOR CONSTRUCTION

REVISION DATES (DESIGN STAGE ONLY)

DESIGNED BY J. GATZA
DRAWN BY J. GATZA
CHECKED BY F. HOFFMANN
IN CHARGE D. ADRIAN
DATE 10/19/12

REGISTERED PROFESSIONAL ENGINEER DARREN J. ADRIAN No. C53031 Exp. 06-30-15 CIVIL STATE OF CALIFORNIA

Exposition Metro Line Construction Authority
Expo
EXPO SKANSKA RADOS
444 South Flower Street
Suite 2200
Los Angeles, CA 90071
TEL (213) 443-7463
FAX (213) 362-9481

PARSONS BRINCKERHOFF
Kimley-Horn and Associates, Inc.
660 SOUTH FIGUEROA STREET SUITE 2040 LOS ANGELES, CA 90017 TEL: (213) 261-6040

EXPOSITION LRT PROJECT- PHASE 2
DEMOLITION
7TH STREET
PLAN
STA 8+00 TO 12+00

Exposition Construction Authority Approved for Construction Drawings - AFC
SEP 02 2014

CONTRACT NO XP8902-002
DRAWING NO D-3C-307 REV 1
SCALE 1"=20'
SHEET NO 21 OF 108

justin.gatza 11:50:09 AM 7/11/2014
Plot Driver=EXPO2-PDF-Full-BW.plt
Pentable=EXPO2-PENTABLE.tbl
C:\Users\justin.gatza\Desktop\EXPORT\expo2-d-3c-307.plg

SCALES HORIZ SCALE: 1"=20' VERT SCALE: NO SCALE
SHEET
INDEX NUMBER

Sheet Version 2.01

REFERENCE :
SUBMITTED BY:
CITY DRAWING NO. 9302
SHEET NO. 21 OF 108
APPROVED BY: DATE: 8/25 20 14
DENISE SUMAL, P.E., CITY ENGINEER
ENGINEERING

REVIEWED : DATE : 20
REVIEWED : DATE : 8/25 20 14
REVIEWED : DATE 8/25 20 14
CITY

NO.	DATE	BY	DESCRIPTION

REVISIONS
APPROVED

City of Santa Monica
Department of Public Works
1437 4th Street, Suite 300 Santa Monica, CA 90401
TEL. (310)458-8721 FAX. (310)393-4425
e-mail : smengineering@smgov.net

Plotted by: justin.gatza 7/11/2014 C:\Users\justin.gatza\Desktop\EXPORT\expo2-d-3c-307.plg

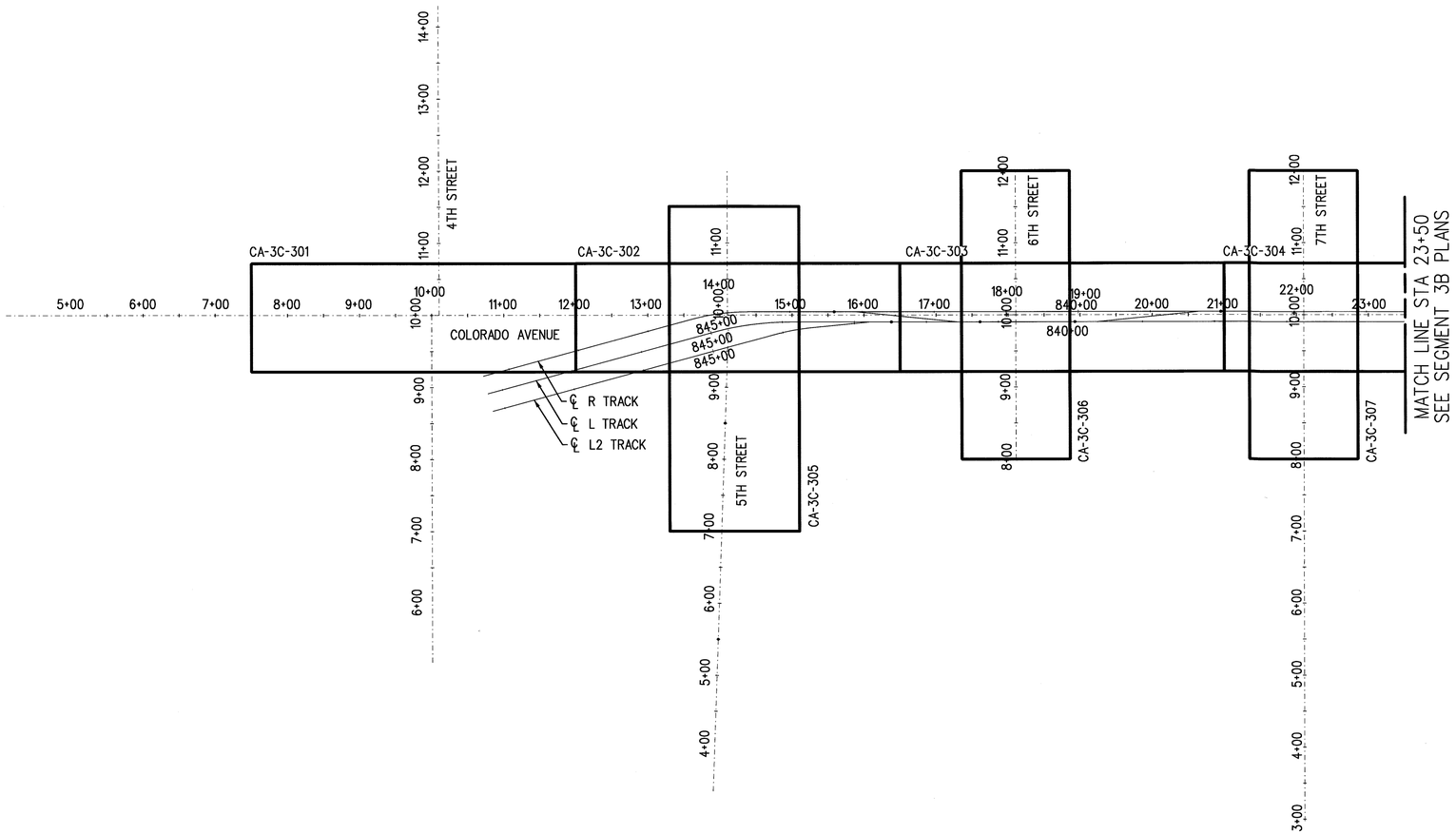

SRJV
MAR 29 2013
ISSUED FOR CONSTRUCTION

100' 0 100' 200'

REV	DATE	BY	APP	REG NO	EXPIRES	SEAL HOLDER	DESCRIPTION
0	10/19/12	FH	DJA	C53031	06-30-13	DARREN J. ADRIAN	APPROVED FOR CONSTRUCTION

REVISION DATES (VERTICAL SHEET ONLY)

DESIGNED BY J. GATZA
DRAWN BY J. GATZA
CHECKED BY F. HOFFMANN
IN CHARGE D. ADRIAN
DATE 10/19/12

REGISTERED PROFESSIONAL ENGINEER DARREN J. ADRIAN No. C53031 Exp. 06-30-13 CIVIL STATE OF CALIFORNIA

Exposition Metro Line Construction Authority
Expo
EXPO SKANSKA RADOS
444 South Flower Street
Suite 2200
Los Angeles, CA 90071
TEL (213) 443-7463
FAX (213) 362-9481

PARSONS BRINCKERHOFF
Kimley-Horn and Associates, Inc.
CURRENT STATUS

EXPOSITION LRT PROJECT- PHASE 2
STREET IMPROVEMENTS
COLORADO AVENUE
KEY MAP
STA 7+50 TO 23+50

Exposition Construction Authority
Approved for Construction
Drawings - AFC
MAR 28 2013

CONTRACT NO XP8902-002
DRAWING NO CK-3C-301
REV 0
SCALE 1"=100'
SHEET NO 22 OF 108

justin.gatza 9:49:47 PM 10/17/2012
Plot Driver=EXPO2-PDF-Full-BW.plt Pentable=EXPO2-PENTABLE.tbl
K:\LDT_RDWY\094617000 - Expo Ph 2\Working\04 BATCH PLOT\Temp Export Files from PW\Roadway\expo2-ck-3c-301.plg

SCALES HORIZ SCALE: 1"=100' VERT SCALE: NO SCALE
SHEET
INDEX NUMBER

REFERENCE:
SUBMITTED BY: Dwayne Dickens
CITY DRAWING NO. 9302
SHEET NO.: 22 OF 108
APPROVED BY: LEONARD SWANN, P.E., CITY ENGINEER
DATE: 3-11 20 13

REVIEWED: DATE: 20
REVIEWED: DATE: 20
REVIEWED: DATE: 3-11 20 13

NO.	DATE	BY	DESCRIPTION	APPROVED
			REVISIONS	

City of Santa Monica
Department of Public Works
1437 4th Street, Suite 300 Santa Monica, CA 90401
TEL. (310)458-8721 FAX. (310)393-4425
e-mail : smengineering@smgov.net

Plotted by: justin.gatza 10/17/2012 K:\LDT_RDWY\094617000 - Expo Ph 2\Working\04 BATCH PLOT\Temp Export Files from PW\Roadway\expo2-ck-3c-301.plg

Sheet Version 2dll

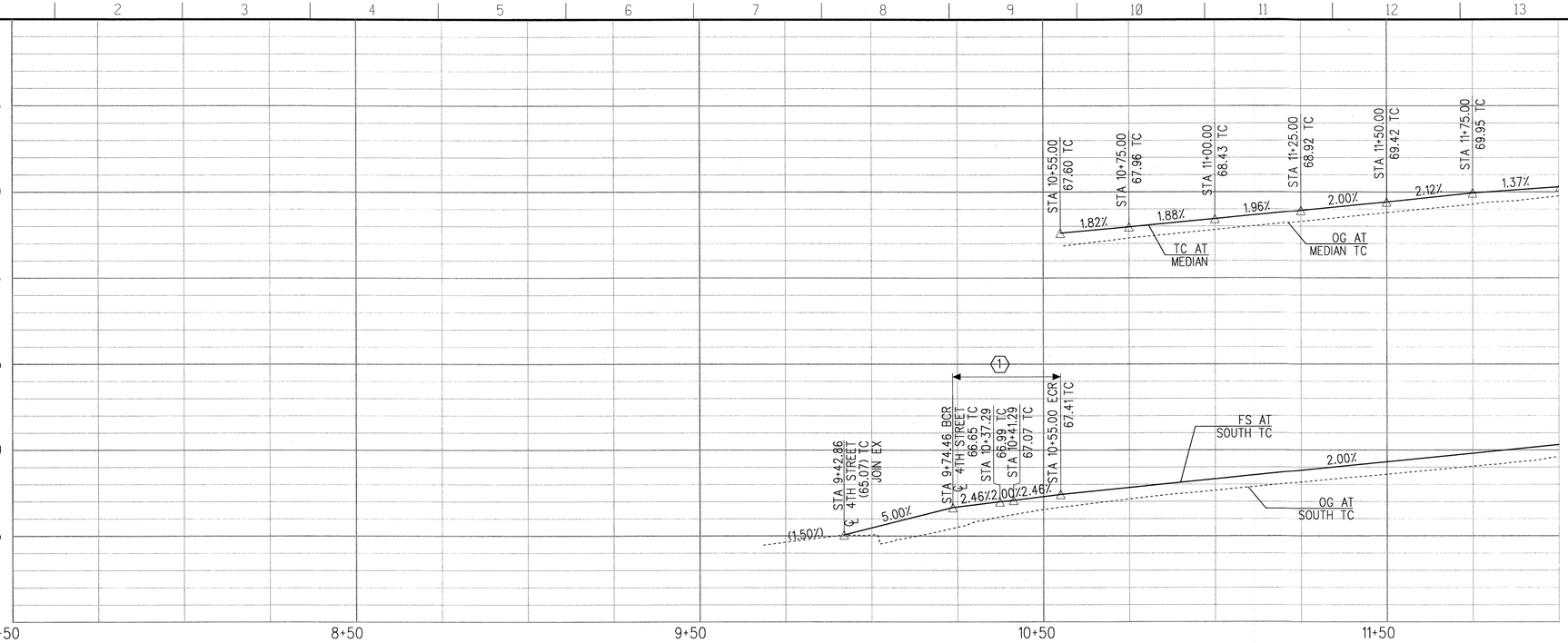

CURVE TABLE				
CURVE	DELTA	RADIUS	TANGENT	LENGTH
1	90° 11'58.99"	20.00'	20.07'	31.49'
2	180° 0'0.00"	1.50'	-	4.71'

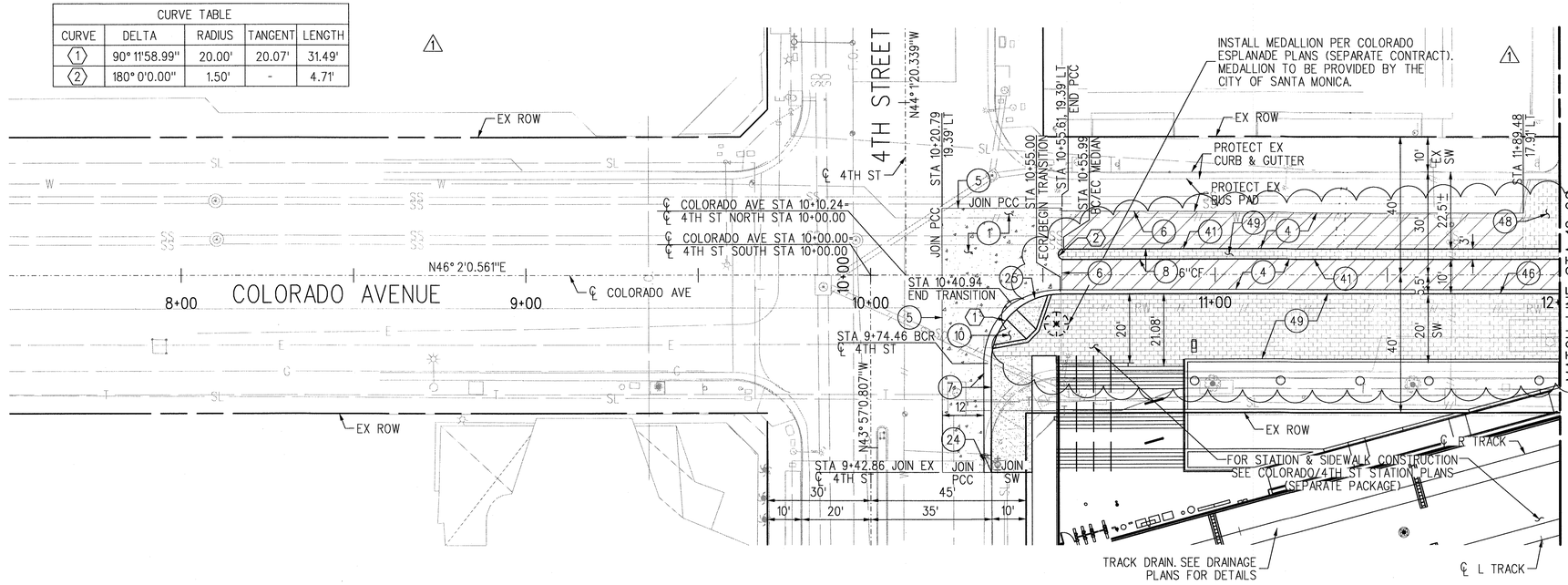

CONSTRUCTION NOTES

1. RECONSTRUCT 9" PCC OVER 4" CRUSHED MISCELLANEOUS BASE PER GEOTECHNICAL REPORT AND SPECIFICATIONS.
4. CONSTRUCT VARIABLE DEPTH ASPHALT CONCRETE OVERLAY (1.5" MINIMUM) PER GEOTECHNICAL REPORT AND SPECIFICATIONS.
5. CONSTRUCT P.C.C. CONSTRUCTION JOINT PER CITY OF SANTA MONICA STD. DETAIL SM9.
6. CONSTRUCT AC/PCC JOINT PER CITY OF SANTA MONICA STD. DETAIL SM11.
7. CONSTRUCT CURB AND GUTTER PER CITY OF SANTA MONICA STD. DETAIL SM6; STD. CURB HEIGHT UNLESS NOTED OTHERWISE ON THE PLANS
8. CONSTRUCT TYPE "A" CURB PER CITY OF SANTA MONICA STD. DETAIL SM6; STD. CURB HEIGHT UNLESS NOTED OTHERWISE ON THE PLANS
9. CONSTRUCT 4" P.C.C. SIDEWALK. CONSTRUCT SIDEWALK JOINTS PER SPPWC STD. 112-2.
10. CONSTRUCT CURB RAMP PER SPPWC STD. 111-4, CASE A, TYPE 1. SEE CURB RAMP DETAIL SHEET C-3C-304.
16. CONSTRUCT OR MODIFY INLET PER DRAINAGE PLANS.
24. CONSTRUCT LOCAL DEPRESSION. MATCH EXISTING.
25. CONSTRUCT CURB TRANSITION PER CONSTRUCTION DETAIL SHEET CC-3C-302, DETAIL 5.
41. CONSTRUCT PAVEMENT CLOSURE PER CONSTRUCTION DETAIL SHEET CC-3B-301, DETAIL 1.
46. CONSTRUCT MODIFIED CURB AND GUTTER PER CONSTRUCTION DETAIL SHEET CC-3C-301, DETAIL 4.
48. CONSTRUCT VARIABLE DEPTH ASPHALT CONCRETE OVERLAY (4" MINIMUM FROM PROPOSED GRADE). ASPHALT CONCRETE TO BE PLACED IN TWO LIFTS WITH THE FIRST LIFT AT 2.5" AND THE SECOND AT 1.5"
49. INSTALL CSM PAVERS PER CONSTRUCTION DETAIL SHEET CC-3C-303. PAVERS TO BE FURNISHED BY THE CITY OF SANTA MONICA.

NOTES

1.) SEE SHEETS G-301 TO G-307 FOR GENERAL NOTES, ABBREVIATIONS, SYMBOLS, AND ADDITIONAL LEGENDS.

2.) THE CONTRACTOR SHALL VERIFY TIE-IN ELEVATIONS PRIOR TO CONSTRUCTION, AND SHALL NOTIFY THE ENGINEER OF ANY DISCREPANCIES.

LEGEND

- RECONSTRUCT AC PAVEMENT
- CONSTRUCT AC PAVEMENT
- CONSTRUCT VARIABLE DEPTH AC OVERLAY
- CONSTRUCT CONCRETE PAVEMENT
- CONSTRUCT CONCRETE SIDEWALK
- CONSTRUCT VARIALBE DEPTH AC OVERLAY (4" MINIMUM)
- INSTALL CSM PAVERS

SRJV

Exposition Construction Authority Approved for Construction Drawings - AFC SEP 30 2014

OCT 01 2014 ISSUED FOR CONSTRUCTION

20' 10' 0 20' 40'

REV	DATE	BY	APP	REG NO	EXPIRES	SEAL HOLDER	DESCRIPTION
2	9/25/14	FH	DJA	C53031	06-30-15	DARREN J. ADRIAN	ECI 98
1	6/11/14	FH	DJA	C53031	06-30-15	DARREN J. ADRIAN	ECI 77
0	10/19/12	FH	DJA	C53031	06-30-13	DARREN J. ADRIAN	APPROVED FOR CONSTRUCTION

DESIGNED BY R. BROWNE
DRAWN BY J. GATZA
CHECKED BY F. HOFFMANN
IN CHARGE D. ADRIAN
DATE 10/19/12

REGISTERED PROFESSIONAL ENGINEER DARREN J. ADRIAN No. C53031 Exp. 06-30-15 CIVIL STATE OF CALIFORNIA

Exposition Metro Line Construction Authority
Expo
EXPO SKANSKA RADOS
444 South Flower Street
Suite 2200
Los Angeles, CA 90071
TEL (213) 443-7463
FAX (213) 362-9481

PARSONS BRINCKERHOFF
Kimley-Horn and Associates, Inc. 600 SOUTH FIGUEROA STREET SUITE 1040 LOS ANGELES, CA 90017 TEL: (213) 281-4040

CURRENT STATUS

EXPOSITION LRT PROJECT- PHASE 2
STREET IMPROVEMENTS
COLORADO AVENUE
PLAN & PROFILE
STA 7+50 TO 12+00

CONTRACT NO XP8902-002
DRAWING NO CA-3C-301 REV 2
SCALE HOR: 1"=20' VERT: 1"=4'
SHEET NO 23 OF 108

SCALES HORIZ SCALE: 1"=20' VERT SCALE: 1"=4'
SHEET
INDEX NUMBER

REVISIONS: NO. DATE BY DESCRIPTION

REFERENCE:
SUBMITTED BY:
CITY DRAWING NO. 9302
SHEET NO. 23 OF 108
APPROVED BY: LEON E. SWAIN, P.E., CITY ENGINEER — DATE: 9-29 2014 — ENGINEERING
REVIEWED: DATE: 20__
REVIEWED: DATE: 20__
REVIEWED: DATE: 9-29 2014 — CITY
APPROVED

City of Santa Monica
Department of Public Works
1437 4th Street, Suite 300 Santa Monica, CA 90401
TEL. (310)458-8721 FAX. (310)393-4425
e-mail : smengineering@smgov.net

REVISION DATES (DESIGN STAGE ONLY)
justin.gatza 4:28:00 PM 9/25/2014
Plot Driver=EXPO2-PDF-Full-BW.plt
Pentable=EXPO2-PENTABLE.tbl
c:\projectwise\dms11375\expo2-ca-3c-301.plg
Plotted by: justin.gatza 9/25/2014
c:\projectwise\dms11375\expo2-ca-3c-301.plg
Sheet Version 2.01

CURVE TABLE				
CURVE	DELTA	RADIUS	TANGENT	LENGTH
1	9° 33'15.35"	281.00'	23.48'	46.86'
2	0° 44'33.33"	1,588.07'	10.29'	20.58'
3	5° 39'36.00"	1,582.00'	78.20'	156.28'
4	90° 0'00.00"	1.50'	1.50'	2.36'
5	47° 44'23.96"	15.00'	6.64'	12.50'

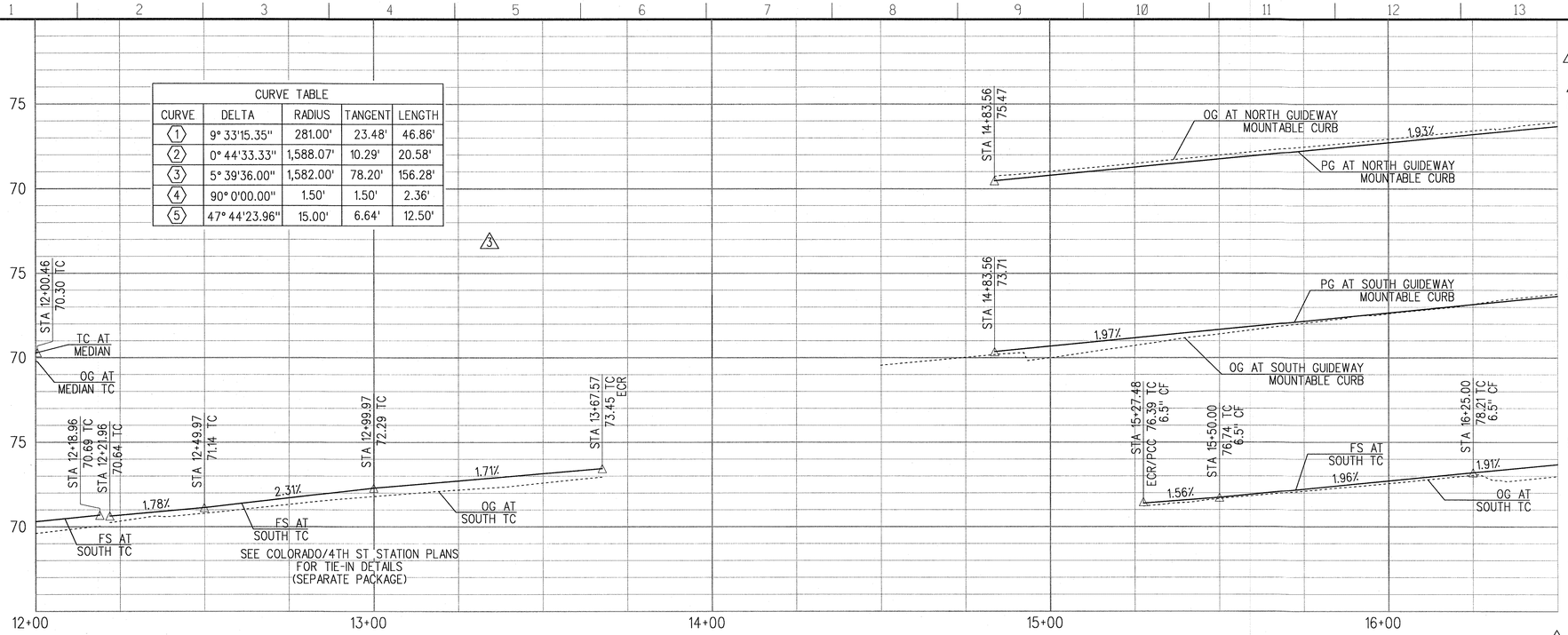

CONSTRUCTION NOTES

1. RECONSTRUCT 9" PCC OVER 4" CRUSHED MISCELLANEOUS BASE PER GEOTECHNICAL REPORT AND SPECIFICATIONS.
3. CONSTRUCT 11.4" ASPHALT CONCRETE PAVEMENT OVER 12" SCARIFIED AND RECOMPACTED SUBGRADE PER CITY OF SANTA MONICA STD. DETAIL SM11 OR MATCH EXISTING SECTION, WHICHEVER IS THICKER.
4. CONSTRUCT VARIABLE DEPTH ASPHALT CONCRETE OVERLAY (1.5" MINIMUM) PER GEOTECHNICAL REPORT AND SPECIFICATIONS.
7. CONSTRUCT CURB AND GUTTER PER CITY OF SANTA MONICA STD. DETAIL SM6; STD. CURB HEIGHT UNLESS NOTED OTHERWISE ON THE PLANS
8. CONSTRUCT TYPE "A" CURB PER CITY OF SANTA MONICA STD. DETAIL SM6; STD. CURB HEIGHT UNLESS NOTED OTHERWISE ON THE PLANS
9. CONSTRUCT 4" P.C.C. SIDEWALK. CONSTRUCT SIDEWALK JOINTS PER SPPWC STD. 112-2.
13. CONSTRUCT PCC DRIVEWAY PER CITY SANTA MONICA STD. DETAIL SM5.
26. CONSTRUCT MODIFIED PCC DRIVEWAY PER CITY OF SANTA MONICA STD. DETAIL SM5. SEE CONSTRUCTION DETAIL SHEET CC-3C-302, DETAIL 6.
46. CONSTRUCT MODIFIED CURB AND GUTTER PER CONSTRUCTION DETAIL SHEET CC-3C-301, DETAIL 4.
48. CONSTRUCT VARIABLE DEPTH ASPHALT CONCRETE OVERLAY (4" MINIMUM FROM PROPOSED GRADE). ASPHALT CONCRETE TO BE PLACED IN TWO LIFTS WITH THE FIRST LIFT AT 2.5" AND THE SECOND AT 1.5".
49. INSTALL CSM PAVERS PER CONSTRUCTION DETAIL SHEET CC-3C-301. PAVERS TO BE FURNISHED BY THE CITY OF SANTA MONICA.

SEE DWG CA-3C-305
FOR CONSTRUCTION ALONG 5TH STREET

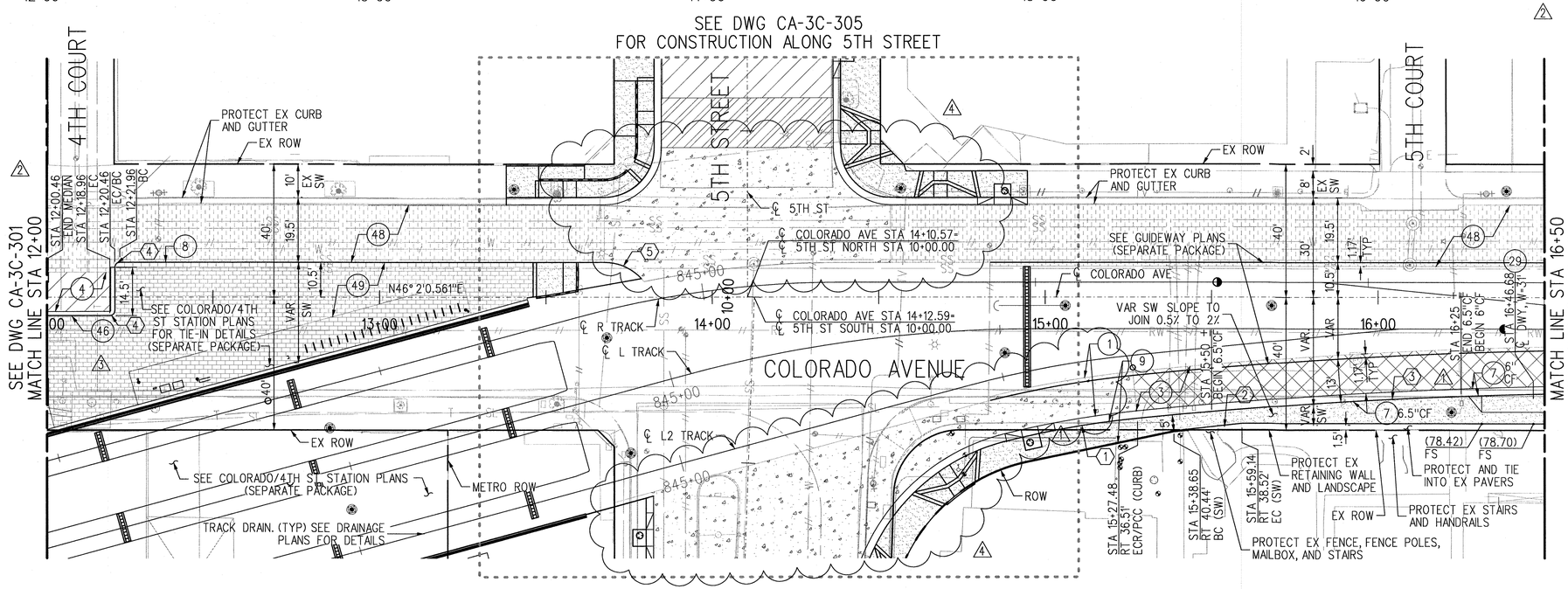

NOTES

1.) SEE SHEETS G-301 TO G-307 FOR GENERAL NOTES, ABBREVIATIONS, SYMBOLS, AND ADDITIONAL LEGENDS.

2.) THE CONTRACTOR SHALL VERIFY TIE-IN ELEVATIONS PRIOR TO CONSTRUCTION, AND SHALL NOTIFY THE ENGINEER OF ANY DISCREPANCIES.

LEGEND

- RECONSTRUCT AC PAVEMENT
- CONSTRUCT AC PAVEMENT
- CONSTRUCT VARIABLE DEPTH AC OVERLAY
- CONSTRUCT CONCRETE PAVEMENT
- CONSTRUCT CONCRETE SIDEWALK
- CONSTRUCT VARIALBE DEPTH AC OVERLAY (4" MINIMUM)
- INSTALL CSM PAVERS

SRJV
SEP 09 2014
ISSUED FOR CONSTRUCTION

20' 10' 0 20' 40'

REV	DATE	BY	APP	REG NO	EXPIRES	SEAL HOLDER	DESCRIPTION
4	7/11/14	FH	DJA	C53031	6/30/15	DARREN J. ADRIAN	ECI 118
3	6/18/14	FH	DJA	C53031	6/30/15	DARREN J. ADRIAN	ECI 98
2	6/11/14	FH	DJA	C53031	6/30/15	DARREN J. ADRIAN	ECI 77
1	9/11/13	FH	DJA	C53031	6/30/15	DARREN J. ADRIAN	ECI 22
0	10/19/12	FH	DJA	C53031	6/30/13	DARREN J. ADRIAN	APPROVED FOR CONSTRUCTION

REVISION DATES (RECORD DRAWINGS ONLY)

DESIGNED BY R. BROWNE
DRAWN BY J. GATZA
CHECKED BY F. HOFFMANN
IN CHARGE D. ADRIAN
DATE 8/27/12

REGISTERED PROFESSIONAL ENGINEER DARREN J. ADRIAN No. C53031 Exp. 06-30-15 CIVIL STATE OF CALIFORNIA

Exposition Metro Line Construction Authority
Expo
EXPO SKANSKA RADOS
444 South Flower Street
Suite 2200
Los Angeles, CA 90071
TEL (213) 443-7463
FAX (213) 362-9481

PARSONS BRINCKERHOFF
Kimley-Horn and Associates, Inc.
860 SOUTH FIGUEROA STREET SUITE 2400 LOS ANGELES, CA 90017 TEL: (213) 261-4040

EXPOSITION LRT PROJECT- PHASE 2
STREET IMPROVEMENTS
COLORADO AVENUE
PLAN & PROFILE
STA 12+00 TO 16+50

Exposition Construction Authority Approved for Construction Drawings - AFC
SEP 08 2014

CONTRACT NO XP8902-002
DRAWING NO CA-3C-302
REV 4
SCALE HOR: 1"=20' VERT: 1"=4'
SHEET NO OF

SCALES HORIZ SCALE: 1"=20' VERT SCALE: 1"=4'
SHEET
INDEX NUMBER

justin.gatza 11:50:12 AM 7/11/2014
Plot Driver=EXPO2-PDF-Full-BW.plt
Pentable=EXPO2-PENTABLE.tbl
C:\Users\justin.gatza\Desktop\EXPORT\expo2-ca-3c-302.plg

CURRENT STATUS

Sheet Version 2.01

NO.	DATE	BY	DESCRIPTION
			REVISIONS

REFERENCE: DATE: 20__
SUBMITTED BY:
CITY DRAWING NO.
SHEET NO: OF
APPROVED BY: DATE: 9/23 2014
CESAR E. SWAIN, P.E. CITY ENGINEER
ENGINEERING
REVIEWED: DATE: 20__
REVIEWED: DATE: 8/23 2014
REVIEWED: DATE: 8/12 2014
CITY
APPROVED

City of Santa Monica
Department of Public Works
1437 4th Street, Suite 300 Santa Monica, CA 90401
TEL. (310)458-8721 FAX. (310)393-4425
e-mail : smengineering@smgov.net

Plotted by: justin.gatza 7/11/2014 C:\Users\justin.gatza\Desktop\EXPORT\expo2-ca-3c-302.plg

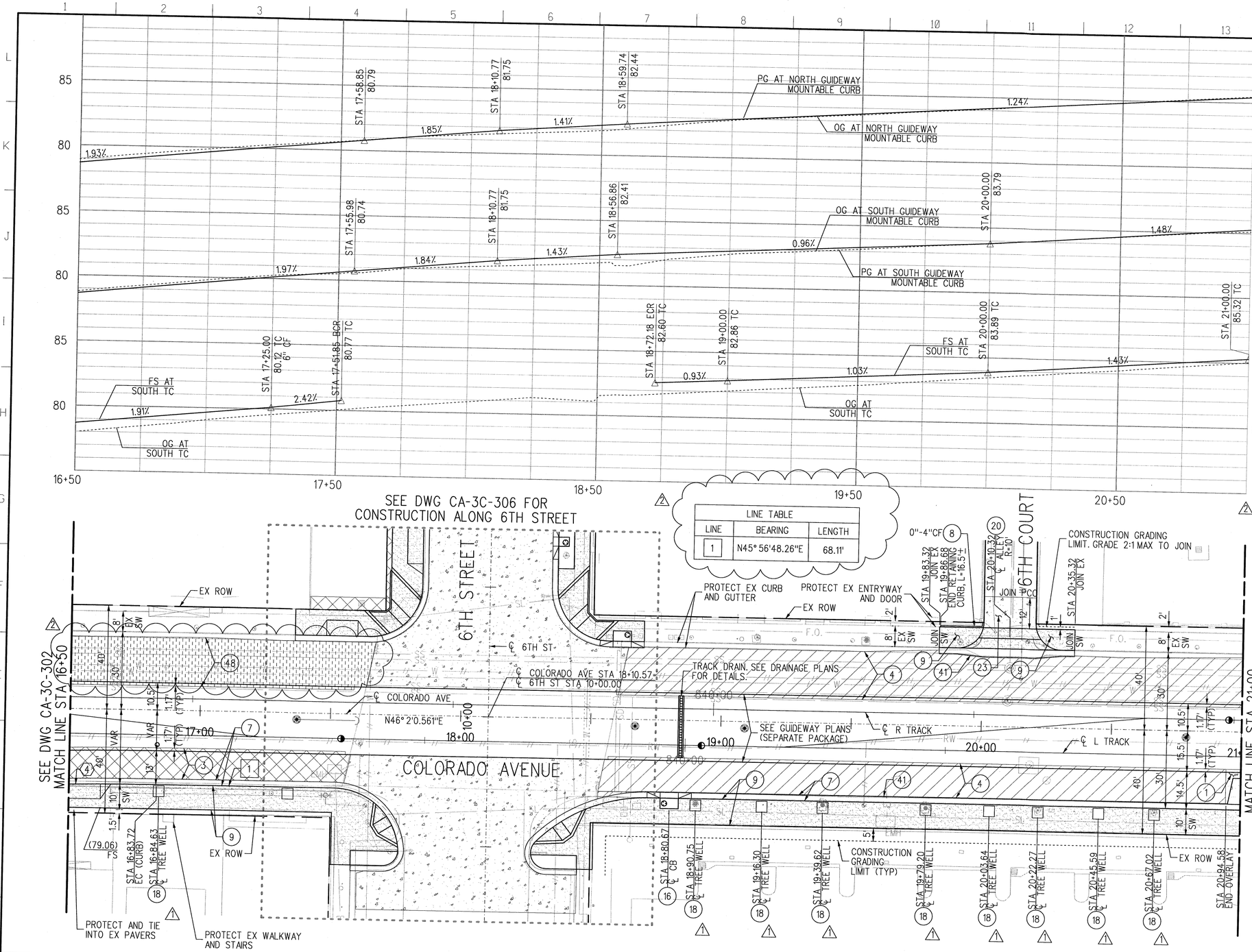

SEE DWG CA-3C-306 FOR CONSTRUCTION ALONG 6TH STREET

LINE TABLE		
LINE	BEARING	LENGTH
1	N45° 56'48.26"E	68.11'

CONSTRUCTION NOTES

1. RECONSTRUCT 9" PCC OVER 4" CRUSHED MISCELLANEOUS BASE PER GEOTECHNICAL REPORT AND SPECIFICATIONS.
2.
3. CONSTRUCT 11.4" ASPHALT CONCRETE PAVEMENT OVER 12" SCARIFED AND RECOMPACTED SUBGRADE PER GEOTECHNICAL REPORT AND SPECIFICATIONS.
4. CONSTRUCT VARIABLE DEPTH ASPHALT CONCRETE OVERLAY (1.5" MINIMUM) PER GEOTECHNICAL REPORT AND SPECIFICATIONS.
7. CONSTRUCT CURB AND GUTTER PER CITY OF SANTA MONICA STD. DETAIL SM6; STD. CURB HEIGHT UNLESS NOTED OTHERWISE ON THE PLANS.
9. CONSTRUCT 4" P.C.C. SIDEWALK. CONSTRUCT SIDEWALK JOINTS PER SPPWC STD. 112-2.
16. CONSTRUCT OR MODIFY INLET PER DRAINAGE PLANS.
18. INSTALL TREE WELL. SEE LANDSCAPE PLANS FOR DETAILS. (SEPARATE PACKAGE)
20. CONSTRUCT MODIFIED PCC ALLEY APPROACH PER CITY OF SANTA MONICA STD. DETAIL SM1. SEE CONSTRUCTION DETAIL SHEET CC-3C-301, DETAIL 3.
23. CONSTRUCT P.C.C. PAVEMENT FOR TIE-IN WITHIN PRIVATE PROPERTY. MATCH EXISTING PAVEMENT SECTION (MINIMUM 4" P.C.C.).
41. CONSTRUCT PAVEMENT CLOSURE PER CONSTRUCTION DETAIL SHEET CC-3C-301, DETAIL 1.
48. CONSTRUCT VARIABLE DEPTH ASPHALT CONCRETE OVERLAY (4" MINIMUM FROM PROPOSED GRADE). ASPHALT CONCRETE TO BE PLACED IN TWO LIFTS WITH THE FIRST LIFT AT 2.5" AND THE SECOND AT 1.5"

NOTES

1.) SEE SHEETS G-301 TO G-307 FOR GENERAL NOTES, ABBREVIATIONS, SYMBOLS, AND ADDITIONAL LEGENDS.

2.) THE CONTRACTOR SHALL VERIFY TIE-IN ELEVATIONS PRIOR TO CONSTRUCTION, AND SHALL NOTIFY THE ENGINEER OF ANY DISCREPANCIES.

CURVE TABLE				
CURVE	DELTA	RADIUS	TANGENT	LENGTH
4	5° 39'36.00"	1,582.00'	78.20'	156.28'

LEGEND

- RECONSTRUCT AC PAVEMENT
- CONSTRUCT AC PAVEMENT
- CONSTRUCT VARIABLE DEPTH AC OVERLAY
- CONSTRUCT CONCRETE PAVEMENT
- CONSTRUCT CONCRETE SIDEWALK
- CONSTRUCT VARIALBE DEPTH AC OVERLAY (4" MINIMUM)

Exposition Construction Authority Approved for Construction Drawings - AFC
JUN 30 2014

SRJV
JUL 01 2014
ISSUED FOR CONSTRUCTION

20' 10' 0 20' 40'

REV	DATE	BY	APP	REG NO	EXPIRES	SEAL HOLDER	DESCRIPTION
2	6/11/14	FH	DJA	C53031	6/30/15	DARREN J. ADRIAN	ECI 77
1	9/11/13	FH	DJA	C53031	6/30/15	DARREN J. ADRIAN	ECI 22
0	10/19/12	FH	DJA	C53031	6/30/13	DARREN J. ADRIAN	APPROVED FOR CONSTRUCTION

REVISION DATES (DESIGN STAGE ONLY)

DESIGNED BY R. BROWNE
DRAWN BY J. GATZA
CHECKED BY F. HOFFMANN
IN CHARGE D. ADRIAN
DATE 10/19/12

REGISTERED PROFESSIONAL ENGINEER DARREN J. ADRIAN No. C53031 Exp. 06-30-15 CIVIL STATE OF CALIFORNIA

Exposition Metro Line Construction Authority
Expo
EXPO SKANSKA RADOS
444 South Flower Street Suite 2200 Los Angeles, CA 90071 TEL (213) 443-7463 FAX (213) 362-9481
PARSONS BRINCKERHOFF
Kimley-Horn and Associates, Inc. 444 South Flower Street Suite 2200 Los Angeles, CA 90071 TEL: (213) 261-4040

PRELIMINARY STATUS

EXPOSITION LRT PROJECT- PHASE 2
STREET IMPROVEMENTS
COLORADO AVENUE
PLAN & PROFILE
STA 16+50 TO 21+00

CONTRACT NO XP8902-002
DRAWING NO CA-3C-303 REV 2
SCALE HOR: 1"=20' VERT: 1"=4'
SHEET NO OF

SCALES HORIZ SCALE: 1"=20' VERT SCALE: 1"=4'
SHEET
INDEX NUMBER

justin.gatza 4:47:57 PM 6/11/2014
Plot Driver=EXPO2-PDF-Full-BW.plt Pentable=EXPO2-PENTABLE.tbl C:\Users\justin.gatza\Desktop\New folder (2)\expo2-ca-3c-303.plg
Sheet Version 2.01

REFERENCE: SUBMITTED BY: CITY DRAWING NO. SHEET NO. OF
APPROVED BY: LEON E. SWAIN, P.E., CITY ENGINEER DATE: 6-17 2014
REVIEWED: DATE: 20
REVIEWED: DATE: 20
REVIEWED: DATE: 6-17 2014
APPROVED CITY
NO. DATE BY DESCRIPTION REVISIONS

City of Santa Monica
Department of Public Works
1437 4th Street, Suite 300 Santa Monica, CA 90401
TEL. (310)458-8721 FAX. (310)393-4425
e-mail : smengineering@smgov.net

Plotted by: justin.gatza 6/11/2014 C:\Users\justin.gatza\Desktop\New folder (2)\expo2-ca-3c-303.plg

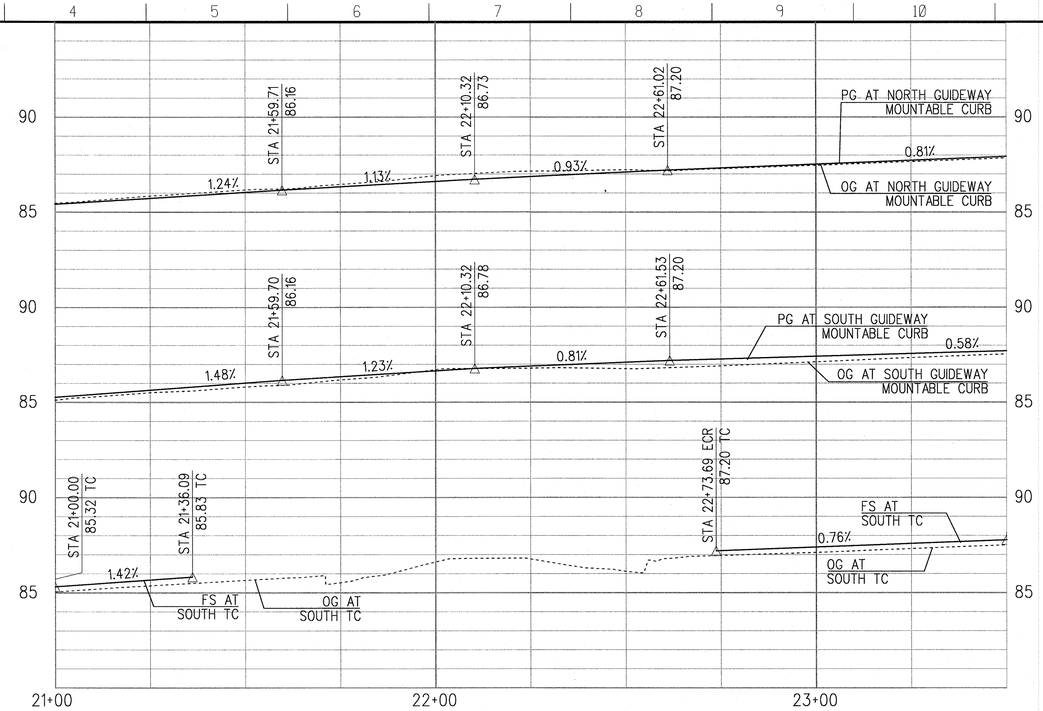

SEE DWG CA-3C-307 FOR CONSTRUCTION ALONG 7TH STREET

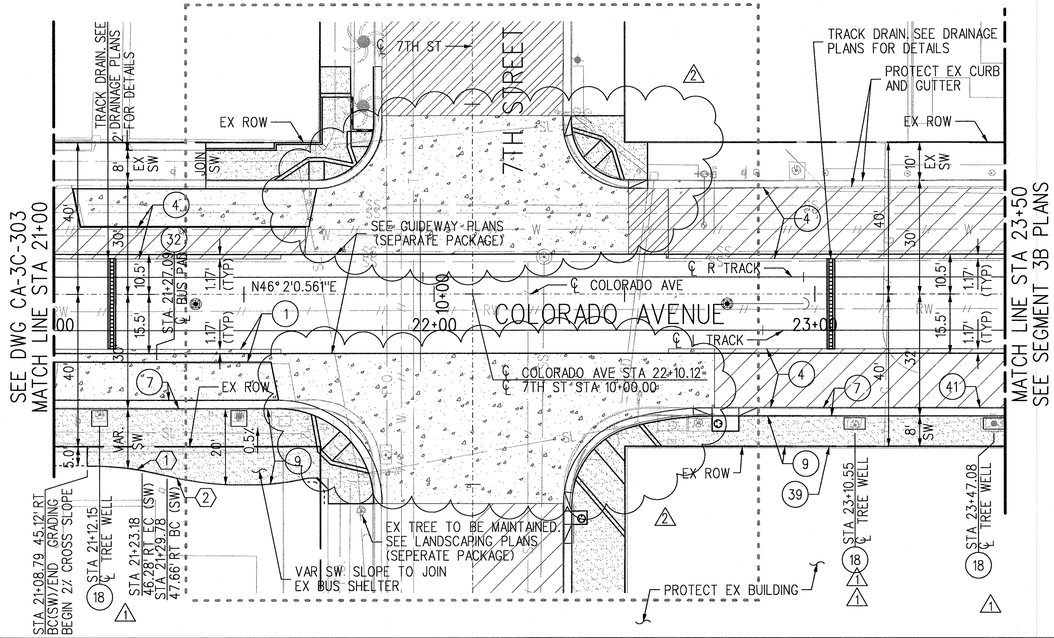

CONSTRUCTION NOTES

1. RECONSTRUCT 9" PCC OVER 4" CRUSHED MISCELLANEOUS BASE PER GEOTECHNICAL REPORT AND SPECIFICATIONS.
4. CONSTRUCT VARIABLE DEPTH ASPHALT CONCRETE OVERLAY (1.5" MINIMUM) PER GEOTECHNICAL REPORT AND SPECIFICATIONS.
7. CONSTRUCT CURB AND GUTTER PER CITY OF SANTA MONICA STD. DETAIL SM6; STD. CURB HEIGHT UNLESS NOTED OTHERWISE ON THE PLANS.
9. CONSTRUCT 4" P.C.C. SIDEWALK. CONSTRUCT SIDEWALK JOINTS PER SPPWC STD. 112-2.
16. CONSTRUCT OR MODIFY INLET PER DRAINAGE PLANS.
18. INSTALL TREE WELL WELLS. SEE LANDSCAPE PLANS FOR DETAILS. (SEPARATE PACKAGE)
32. CONSTRUCT P.C.C. BUS PAD PER CITY OF SANTA MONICA STD. DETAIL SM2.
39. INSTALL WATERPROOFING MEMBRANE AT BUILDING.
41. CONSTRUCT PAVEMENT CLOSURE PER CONSTRUCTION DETAIL SHEET CC-3C-301, DETAIL 1.

NOTES

1.) SEE SHEETS G-301 TO G-307 FOR GENERAL NOTES ABBREVIATIONS, SYMBOLS, AND ADDITIONAL LEGENDS.

2.) THE CONTRACTOR SHALL VERIFY TIE-IN ELEVATIONS PRIOR TO CONSTRUCTION, AND SHALL NOTIFY THE ENGINEER OF ANY DISCREPANCIES.

CURVE TABLE

CURVE	DELTA	RADIUS	TANGENT	LENGTH
1	10° 1'12.34"	82.66'	7.25'	14.46'
2	11° 15'12.59"	84.96'	8.37'	16.69'

LEGEND

- RECONSTRUCT AC PAVEMENT
- CONSTRUCT AC PAVEMENT
- CONSTRUCT VARIABLE DEPTH AC OVERLAY
- CONSTRUCT CONCRETE PAVEMENT
- CONSTRUCT CONCRETE SIDEWALK
- CONSTRUCT VARIALBE DEPTH AC OVERLAY (4" MINIMUM)
- INSTALL CSM PAVERS

SRJV
SEP 04 2014
ISSUED FOR CONSTRUCTION

20' 10' 0 20' 40'

REV	DATE	BY	APP	REG NO	EXPIRES	SEAL HOLDER	DESCRIPTION
2	7/11/14	FH	DJA	C53031	6/30/15	DARREN J. ADRIAN	ECI 118
1	9/11/13	FH	DJA	C53031	6/30/15	DARREN J. ADRIAN	ECI 22
0	10/19/12	FH	DJA	C53031	6/30/13	DARREN J. ADRIAN	APPROVED FOR CONSTRUCTION

REVISION DATES (DESIGN STAGE ONLY)

DESIGNED BY R. BROWNE
DRAWN BY J. GATZA
CHECKED BY F. HOFFMANN
IN CHARGE D. ADRIAN
DATE 10/19/12

REGISTERED PROFESSIONAL ENGINEER DARREN J. ADRIAN No. C53031 Exp. 06-30-15 CIVIL STATE OF CALIFORNIA

Exposition Metro Line Construction Authority
Expo
EXPO SKANSKA RADOS
444 South Flower Street
Suite 2200
Los Angeles, CA 90071
TEL (213) 443-7463
FAX (213) 362-9481

PARSONS BRINCKERHOFF
Parsons Brinckerhoff Quade & Douglas, Inc.
880 SOUTH FIGUEROA STREET SUITE 1000 LOS ANGELES, CA 90017 TEL: (213) 261-4040

DOCUMENT STATUS

EXPOSITION LRT PROJECT- PHASE 2
STREET IMPROVEMENTS
COLORADO AVENUE
PLAN & PROFILE
STA 21+00 TO 23+50

Exposition Construction Authority Approved for Construction Drawings - AFC
SEP 02 2014

CONTRACT NO XP8902-002
DRAWING NO CA-3C-304 REV 2
SCALE HOR: 1"=20' VERT: 1"=4'
SHEET NO OF

justin.gatza 11:50:13 AM 7/11/2014
Plot Driver=EXPO2-PDF-Full-BW.plt Pentable=EXPO2-PENTABLE.tbl
C:\Users\justin.gatza\Desktop\EXPORT\expo2-ca-3c-304.plg

SCALES HORIZ SCALE: 1"=20' VERT SCALE: 1"=4'
SHEET
INDEX NUMBER

Sheet Version 2.01

REFERENCE:
SUBMITTED BY:
CITY DRAWING NO.
SHEET NO.: OF
APPROVED BY: LEON E. SHMAN, P.E., CITY ENGINEER — DATE 9/29 2014
ENGINEERING

REVIEWED: DATE 20
REVIEWED: DATE 9/29 2014
REVIEWED: DATE 9/29 2014
CITY

NO.	DATE	BY	DESCRIPTION
			REVISIONS

APPROVED

City of Santa Monica
Department of Public Works
1437 4th Street, Suite 300 Santa Monica, CA 90401
TEL. (310)458-8721 FAX. (310)393-4425
e-mail : smengineering@smgov.net

Plotted by: justin.gatza 7/11/2014 C:\Users\justin.gatza\Desktop\EXPORT\expo2-ca-3c-304.plg

CURVE TABLE				
CURVE	DELTA	RADIUS	TANGENT	LENGTH
1	90° 0'24.00"	15.00'	15.00'	23.56'
2	89° 59'36.00"	15.00'	15.00'	23.56'
3	74° 0'45.83"	60.00'	45.22'	77.51'
4	76° 16'44.12"	52.50'	41.22'	69.90'
5	~~180 56'04.68"~~ ~~188° 47'10.78"~~	3.50'	~~429.11'~~ ~~48.32'~~	~~11.05'~~ ~~11.60'~~
6	8° 51'39.06"	400.00'	30.99'	61.86'
7	~~179 32'32.35"~~ ~~186° 45'20.91"~~	~~2.75'~~ ~~1.96'~~	~~336.73'~~ ~~33.02'~~	~~0.58'~~ ~~6.35'~~
8	68° 47'42.99"	15.00'	10.27'	18.01'
9	47° 44'23.96"	15.00'	6.64'	12.50'
10	8° 12'39.46"	281.00'	20.17'	40.27'

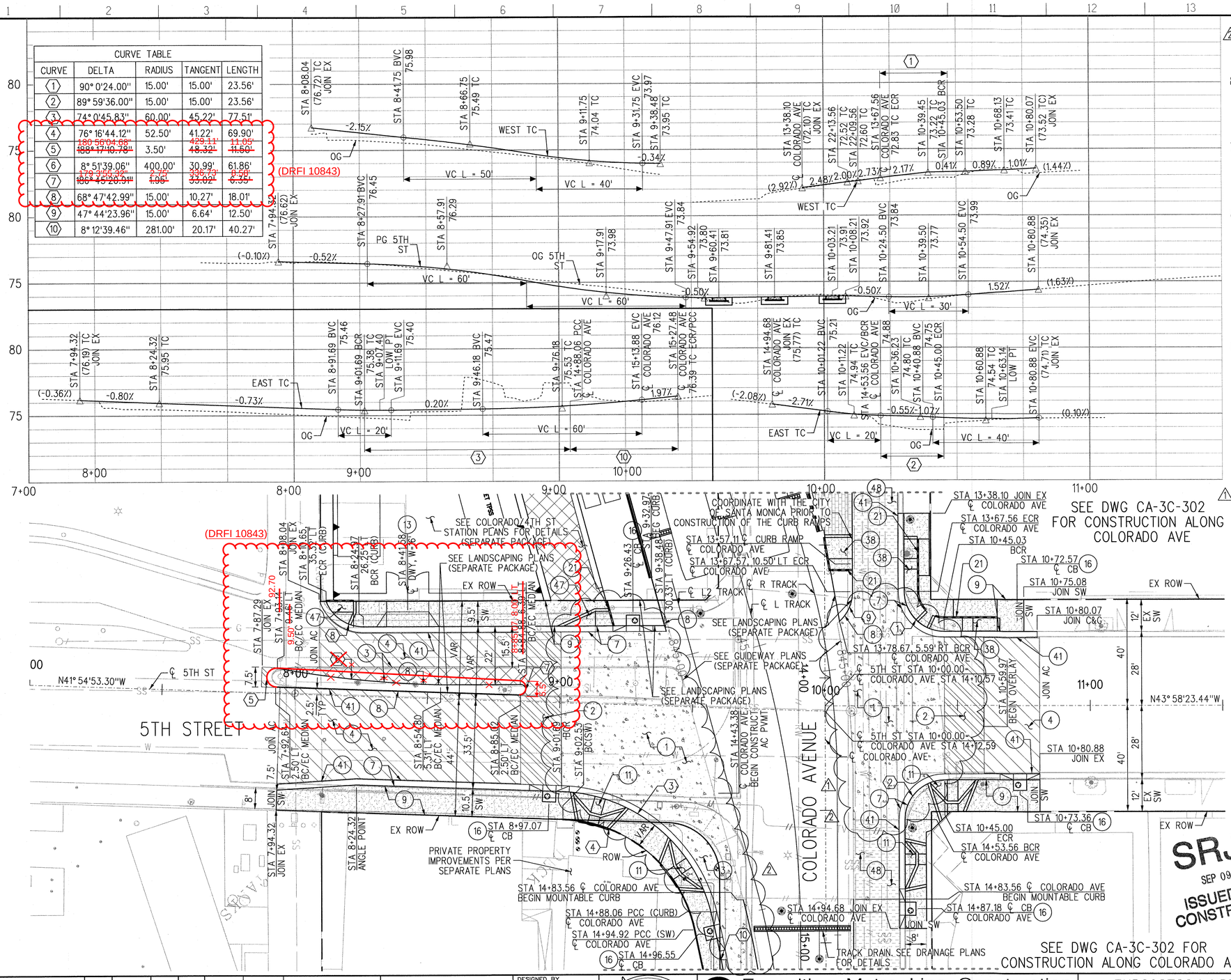

CONSTRUCTION NOTES

1. RECONSTRUCT 9" PCC OVER 4" CRUSHED MISCELLANEOUS BASEJ PER GEOTECHNICAL REPORT AND SPECIFICATIONS.
2. RECONSTRUCT ASPHALT CONCRETE PAVEMENT TO MATCH EXISTING SECTION (8" MIN ASPHALT CONCRETE PAVEMENT). EXISTING BASE OR SUBGRADE SOILS SHALL BE COMPACTED TO 90% MINIMUM RELATIVE COMPACTION.
3. CONSTRUCT 11.4" ASPHALT CONCRETE PAVEMENT OVER 12" SCARIFIED AND RECOMPACTED SUGRAGE PER GEOTECHNICAL REPORT AND SPECIFICATIONS.
4. CONSTRUCT VARIABLE DEPTH ASPHALT CONCRETE OVERLAY (1.5" MINIMUM) PER GEOTECHNICAL REPORT AND SPECIFICATIONS.
7. CONSTRUCT CURB AND GUTTER PER CITY OF SANTA MONICA STD. DETAIL SM6; STD. CURB HEIGHT UNLESS NOTED OTHERWISE ON THE PLANS.
8. CONSTRUCT TYPE "A" CURB PER CITY OF SANTA MONICA STD. DETAIL SM6. USE STANDARD CURB HEIGHT UNLESS NOTED OTHERWISE ON THE PLANS.
9. CONSTRUCT 4" P.C.C. SIDEWALK. CONSTRUCT SIDEWALK JOINTS PER SPPWC STD. 112-2.
11. CONSTRUCT CURB RAMP PER SPPWC STD. 111-4, CASE A, TYPE 2.
13. CONSTRUCT PCC DRIVEWAY PER CITY OF SANTA MONICA STD. DETAIL SM5.
16. CONSTRUCT OR MODIFY INLET PER DRAINAGE PLANS.
21. CONSTRUCT HANDRAIL PER SPPWC STD. 606-3, TYPE A.
38. CONSTRUCT CURB RAMP PER SPPWC STD. 111-4, CASE B, TYPE 1.
41. CONSTRUCT PAVEMENT CLOSURE PER CONSTRUCTION DETAIL SHEET CC-3B-301, DETAIL 1.
46. CONSTRUCT CURB RAMP PER SPPWC STD. 111-4, CASE D, TYPE 2. SEE CURB RAMP DETAIL SHEET C-3C-304.
47. CONSTRUCT CURB RAMP PER SPPWC STD. 111-4, CASE D, TYPE 2.
48. CONSTRUCT VARIABLE DEPTH ASPHALT CONCRETE OVERLAY (4" MINIMUM FROM PROPOSED GRADE). ASPHALT CONCRETE TO BE PLACED IN TWO LIFTS WITH THE FIRST LIFT AT 2.5" AND THE SECOND AT 1.5".

NOTES

1.) SEE SHEETS G-301 TO G-307 FOR GENERAL NOTES, ABBREVIATIONS, SYMBOLS, AND ADDITIONAL LEGENDS.

2.) THE CONTRACTOR SHALL VERIFY TIE-IN ELEVATIONS PRIOR TO CONSTRUCTION, AND SHALL NOTIFY THE ENGINEER OF ANY DISCREPANCIES.

LEGEND

- RECONSTRUCT AC PAVEMENT
- CONSTRUCT AC PAVEMENT
- CONSTRUCT VARIABLE DEPTH AC OVERLAY
- CONSTRUCT CONCRETE PAVEMENT
- CONSTRUCT CONCRETE SIDEWALK
- CONSTRUCT VARIALBE DEPTH AC OVERLAY (4" MINIMUM)
- INSTALL CSM PAVERS

20' 10' 0 20' 40'

REV	DATE	BY	APP	REG NO	EXPIRES	SEAL HOLDER	DESCRIPTION
2	7/11/14	FH	DJA	C53031	6/30/15	DARREN J. ADRIAN	ECI 118
1	6/11/14	FH	DJA	C53031	6/30/15	DARREN J. ADRIAN	ECI 77
0	10/19/12	FH	DJA	C53031	06-30-13	DARREN J. ADRIAN	APPROVED FOR CONSTRUCTION

REVISION DATES (DESIGN STAGE ONLY)

DESIGNED BY R. BROWNE
DRAWN BY J. GATZA
CHECKED BY F. HOFFMANN
IN CHARGE D. ADRIAN
DATE 10/19/12

REGISTERED PROFESSIONAL ENGINEER DARREN J. ADRIAN No. C53031 Exp. 06-30-15 CIVIL STATE OF CALIFORNIA

Exposition Metro Line Construction Authority
Expo
EXPO SKANSKA RADOS
444 South Flower Street
Suite 2200
Los Angeles, CA 90071
TEL (213) 443-7463
FAX (213) 362-9481

PARSONS BRINCKERHOFF
Kimley-Horn and Associates, Inc.
860 SOUTH FIGUEROA STREET SUITE 1000 LOS ANGELES, CA 90017 TEL: (213) 201-1040

EXPOSITION LRT PROJECT- PHASE 2
STREET IMPROVEMENTS
5TH STREET
PLAN & PROFILE
STA 7+00 to 11+50

Exposition Construction Authority
Approved for Construction
Drawings - AFC
SEP 08 2014

CONTRACT NO XP8902-002
DRAWING NO CA-3C-305 REV 2
SCALE HOR: 1"=20' VERT: 1"=4'
SHEET NO 27 OF 108

SCALES HORIZ SCALE: 1"=20' VERT SCALE: 1"=4'
SHEET
INDEX NUMBER

justin.gatza 11:50:14 AM 7/11/2014
Plot Driver=EXPO2-PDF-Full-BW.plt Pentable=EXPO2-PENTABLE.tbl C:\Users\justin.gatza\Desktop\EXPORT\expo2-ca-3c-305.plg

Sheet Version 2.01

CITY DRAWING NO. SHEET NO. OF
DATE: 9/29 2014
APPROVED BY: LEON E. SHMAN, P.E., CITY ENGINEER
REFERENCE: SUBMITTED BY: DATE: 20
REVIEWED: DATE: 9/29 2014
REVIEWED: DATE: 7/11/2014
REVIEWED: DATE: 20
XX APPROVED CITY ENGINEERING

NO.	DATE	BY	DESCRIPTION

REVISIONS

City of Santa Monica
Department of Public Works
1437 4th Street, Suite 300 Santa Monica, CA 90401
TEL. (310)458-8721 FAX. (310)393-4425
e-mail : smengineering@smgov.net

Plotted by: justin.gatza 7/11/2014 C:\Users\justin.gatza\Desktop\EXPORT\expo2-ca-3c-305.plg

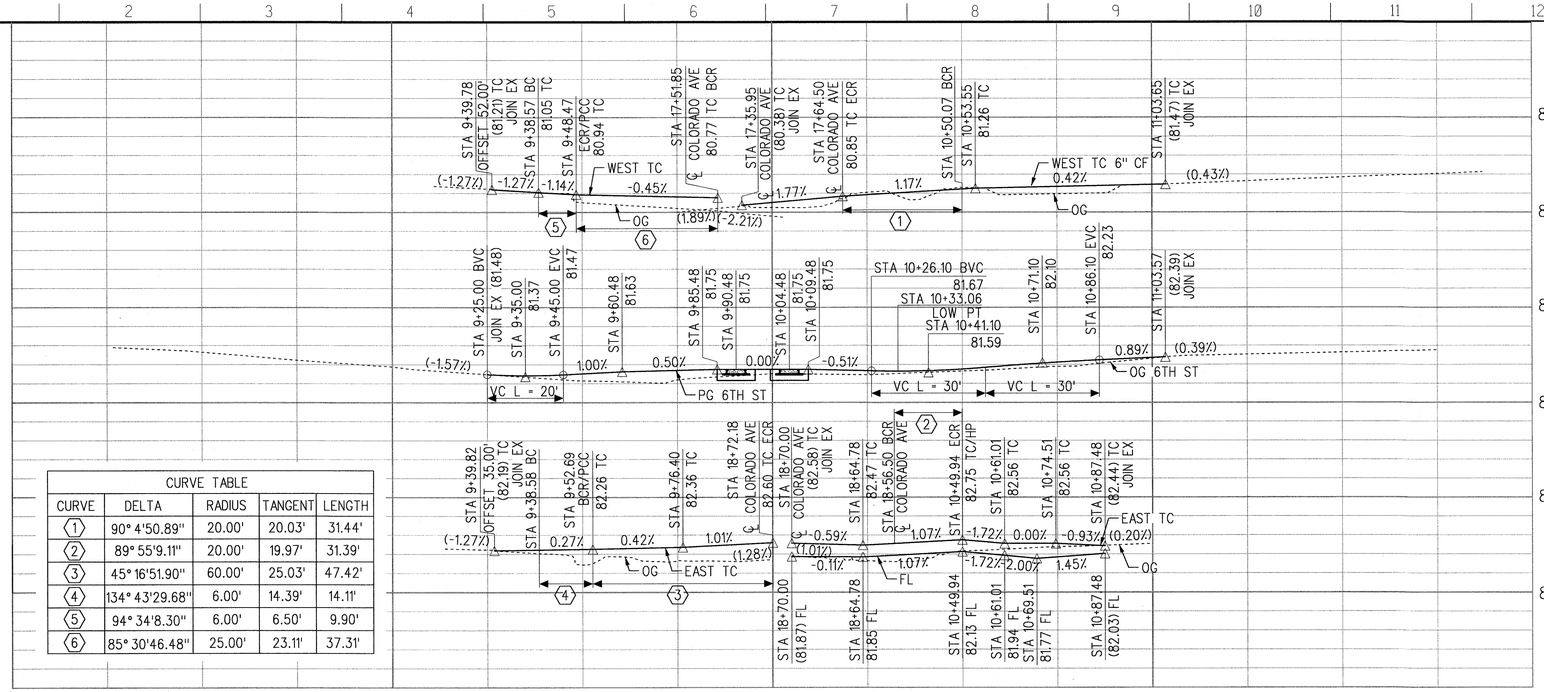

CURVE TABLE				
CURVE	DELTA	RADIUS	TANGENT	LENGTH
1	90° 4'50.89"	20.00'	20.03'	31.44'
2	89° 55'9.11"	20.00'	19.97'	31.39'
3	45° 16'51.90"	60.00'	25.03'	47.42'
4	134° 43'29.68"	6.00'	14.39'	14.11'
5	94° 34'8.30"	6.00'	6.50'	9.90'
6	85° 30'46.48"	25.00'	23.11'	37.31'

SEE DWG CA-3A-303 FOR
CONSTRUCTION ALONG COLORADO AVENUE

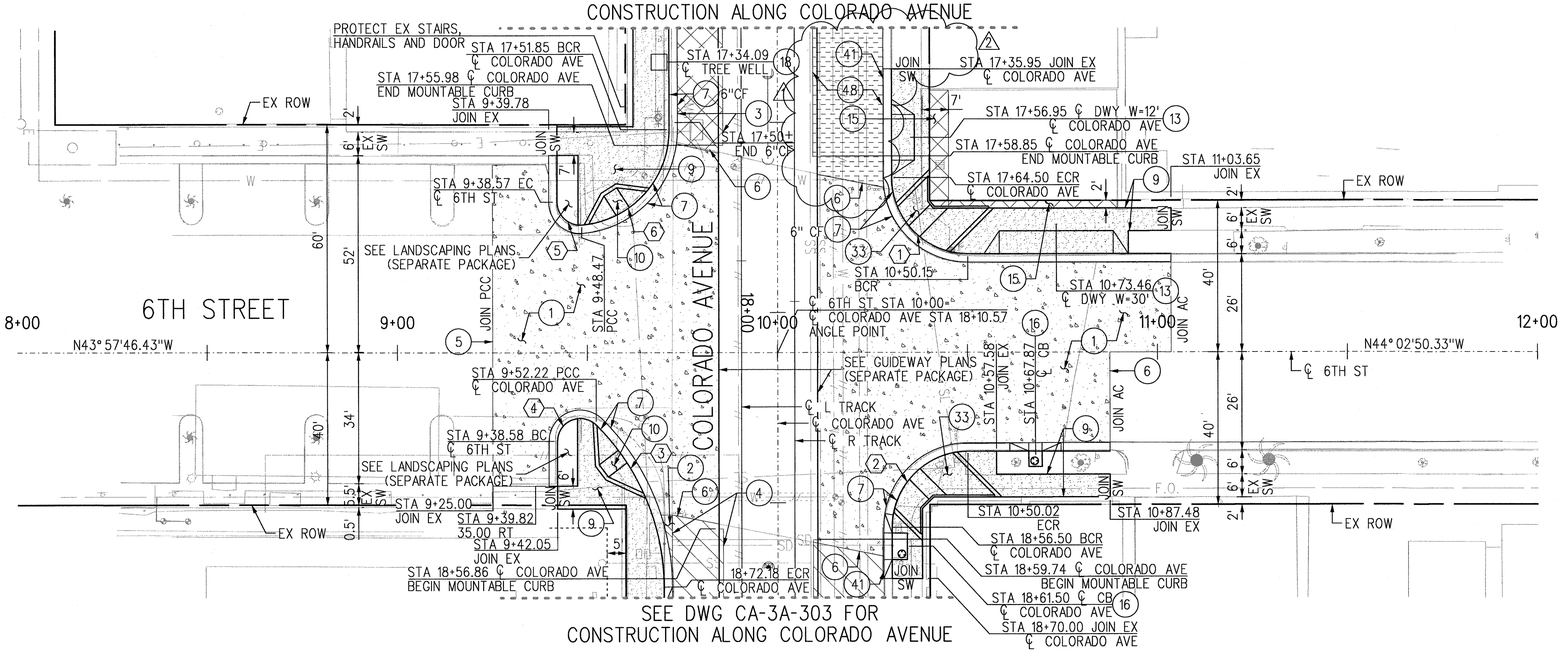

CONSTRUCTION NOTES

1. RECONSTRUCT 9" PCC OVER 4" CRUSHED MISCELLANEOUS BASE PER GEOTECHNICAL REPORT AND SPECIFICATIONS.
2.
3. CONSTRUCT 11.4" ASPHALT CONCRETE PAVEMENT OVER 12" SCARIFED AND RECOMPACTED SUBGRADE PER GEOTECHNICAL REPORT AND SPECIFICATIONS.
4. CONSTRUCT VARIABLE DEPTH ASPHALT CONCRETE OVERLAY (1.5" MINIMUM) PER GEOTECHNICAL REPORT AND SPECIFICATIONS.
5. CONSTRUCT P.C.C. CONSTRUCTION JOINT PER CITY OF SANTA MONICA STD. DETAIL SM9.
6. CONSTRUCT AC/PCC JOINT PER CITY OF SANTA MONICA STD. DETAIL SM11.
7. CONSTRUCT CURB AND GUTTER PER CITY OF SANTA MONICA STD. DETAIL SM6; STD. CURB HEIGHT UNLESS NOTED OTHERWISE ON THE PLANS.
9. CONSTRUCT 4" P.C.C. SIDEWALK. CONSTRUCT SIDEWALK JOINTS PER SPPWC STD. 112-2.
10. CONSTRUCT CURB RAMP PER SPPWC STD. 111-4, CASE A, TYPE 1. SEE CURB RAMP DETAIL SHEET C-3C-307.
13. CONSTRUCT P.C.C. DRIVEWAY PER CITY OF SANTA MONICA STD. DETAIL SM5.
15. CONSTRUCT AC PAVEMENT FOR TIE-IN WITHIN PRIVATE PROPERTY. MATCH EXISTING PAVEMENT SECTION (MINIMUM 4" AC).
16. CONSTRUCT OR MODIFY INLET PER DRAINAGE PLANS.
18. INSTALL TREE WELL WELLS. SEE LANDSCAPE PLANS FOR DETAILS. (SEPARATE PACKAGE)
33. CONSTRUCT CURB RAMP PER SPPWC STD. 111-4, CASE B, TYPE 2. SEE CURB RAMP DETAIL SHEET C-3C-306.
41. CONSTRUCT PAVEMENT CLOSURE PER CONSTRUCTION DETAIL SHEET CC-3C-301, DETAIL 1.
48. CONSTRUCT VARIABLE DEPTH ASPHALT CONCRETE OVERLAY (4" MINIMUM PROPOSED GRADE). ASPHALT CONCRETE TO BE PLACED IN TWO LIFTS WITH THE FIRST LIFT AT 2.5" AND THE SECOND AT 1.5".

NOTES

1.) SEE SHEETS G-301 TO G-307 FOR GENERAL NOTES, ABBREVIATIONS, SYMBOLS, AND ADDITIONAL LEGENDS.

2.) THE CONTRACTOR SHALL VERIFY TIE-IN ELEVATIONS PRIOR TO CONSTRUCTION, AND SHALL NOTIFY THE ENGINEER OF ANY DISCREPANCIES.

LEGEND

- RECONSTRUCT AC PAVEMENT
- CONSTRUCT AC PAVEMENT
- CONSTRUCT VARIABLE DEPTH AC OVERLAY
- CONSTRUCT CONCRETE PAVEMENT
- CONSTRUCT CONCRETE SIDEWALK
- CONSTRUCT VARIALBE DEPTH AC OVERLAY (4" MINIMUM)

SRJV
JUL 01 2014
ISSUED FOR CONSTRUCTION

Exposition Construction Authority
Approved for Construction
Drawings - AFC
JUN 30 2014

20' 10' 0 20' 40'

REV	DATE	BY	APP	REG NO	EXPIRES	SEAL HOLDER	DESCRIPTION
2	6/11/14	FH	DJA	C53031	6/30/15	DARREN J. ADRIAN	ECI 77
1	9/11/13	FH	DJA	C53031	6/30/15	DARREN J. ADRIAN	ECI 22
0	10/19/12	FH	DJA	C53031	6/30/13	DARREN J. ADRIAN	APPROVED FOR CONSTRUCTION

REVISION DATES (DESIGN STAGE ONLY)

DESIGNED BY R. BROWNE
DRAWN BY J. GATZA
CHECKED BY F. HOFFMANN
IN CHARGE D. ADRIAN
DATE 10/19/12

REGISTERED PROFESSIONAL ENGINEER — DARREN J. ADRIAN — No. C53031 — Exp. 06-30-15 — CIVIL — STATE OF CALIFORNIA

Exposition Metro Line Construction Authority
Expo
EXPO SKANSKA RADOS
444 South Flower Street
Suite 2200
Los Angeles, CA 90071
TEL (213) 443-7463
FAX (213) 362-9481

PARSONS BRINCKERHOFF
Kimley-Horn and Associates, Inc.
660 SOUTH FIGUEROA STREET SUITE 1010 LOS ANGELES, CA 90017 TEL: (213) 341-4640

EXPOSITION LRT PROJECT- PHASE 2
STREET IMPROVEMENTS
6TH STREET
PLAN & PROFILE
STA 8+00 TO 12+00

CONTRACT NO XP8902-002
DRAWING NO CA-3C-306
REV 2
SCALE HOR: 1"=20' VERT: 1"=4'
SHEET NO OF

SCALES: HORIZ SCALE: 1"=20' VERT SCALE: 1"=4'
SHEET
INDEX NUMBER

justin.gatza 4:48:00 PM 6/11/2014
Plot Driver=EXPO2-PDF-Full-BW.plt Pentable=EXPO2-PENTABLE.tbl
C:\Users\justin.gatza\Desktop\New folder (2)\expo2-ca-3c-306.plg

Sheet Version 2.01

REFERENCE:
SUBMITTED BY:
CITY DRAWING NO.
SHEET NO. OF
APPROVED BY: LOUIS E. SOMMA, P.E., CITY ENGINEER — DATE 6-17-2014
ENGINEERING
REVIEWED: DATE 6-17-2014
CITY

NO.	DATE	BY	DESCRIPTION
			REVISIONS

APPROVED

City of Santa Monica
Department of Public Works
1437 4th Street, Suite 300 Santa Monica, CA 90401
TEL. (310)458-8721 FAX. (310)393-4425
e-mail : smengineering@smgov.net

Plotted by: justin.gatza 6/11/2014 C:\Users\justin.gatza\Desktop\New folder (2)\expo2-ca-3c-306.plg

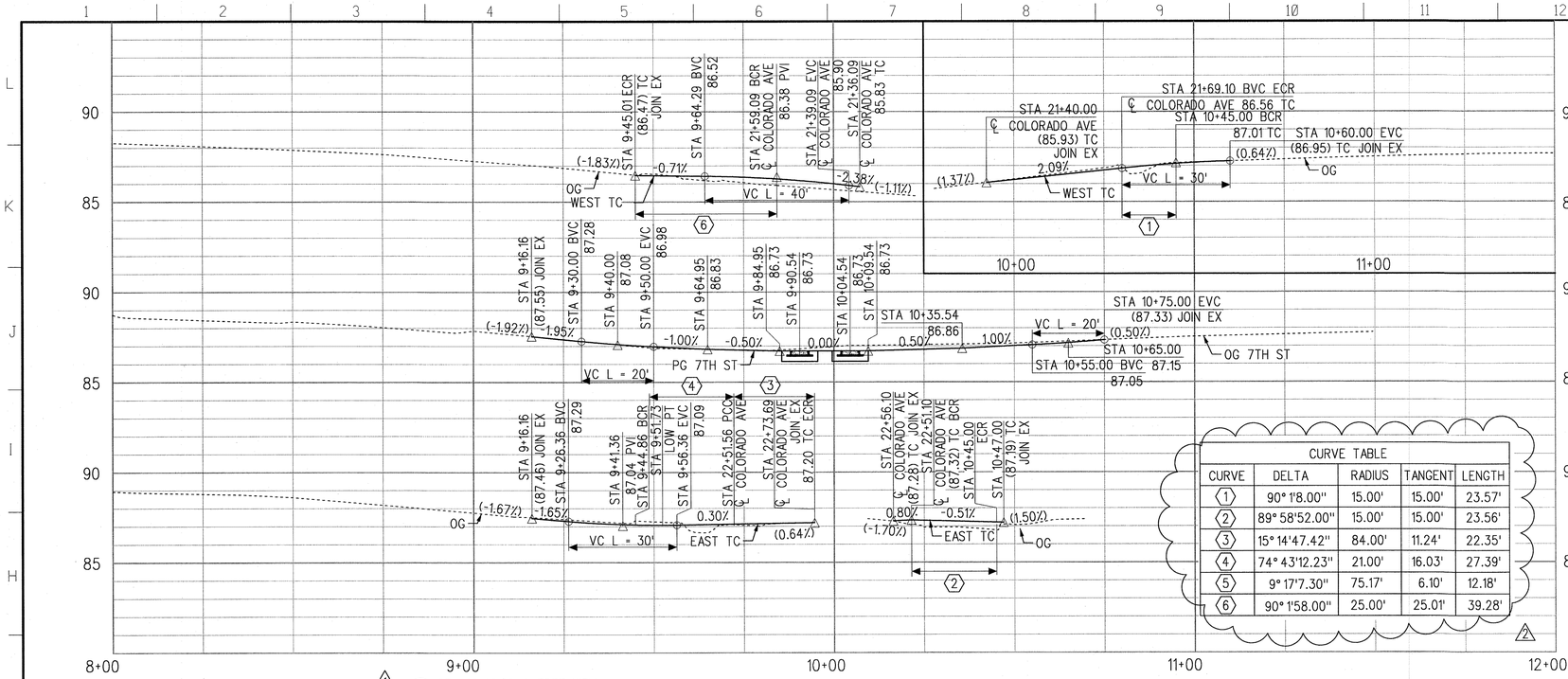

CURVE TABLE				
CURVE	DELTA	RADIUS	TANGENT	LENGTH
1	90° 1'8.00"	15.00'	15.00'	23.57'
2	89° 58'52.00"	15.00'	15.00'	23.56'
3	15° 14'47.42"	84.00'	11.24'	22.35'
4	74° 43'12.23"	21.00'	16.03'	27.39'
5	9° 17'7.30"	75.17'	6.10'	12.18'
6	90° 1'58.00"	25.00'	25.01'	39.28'

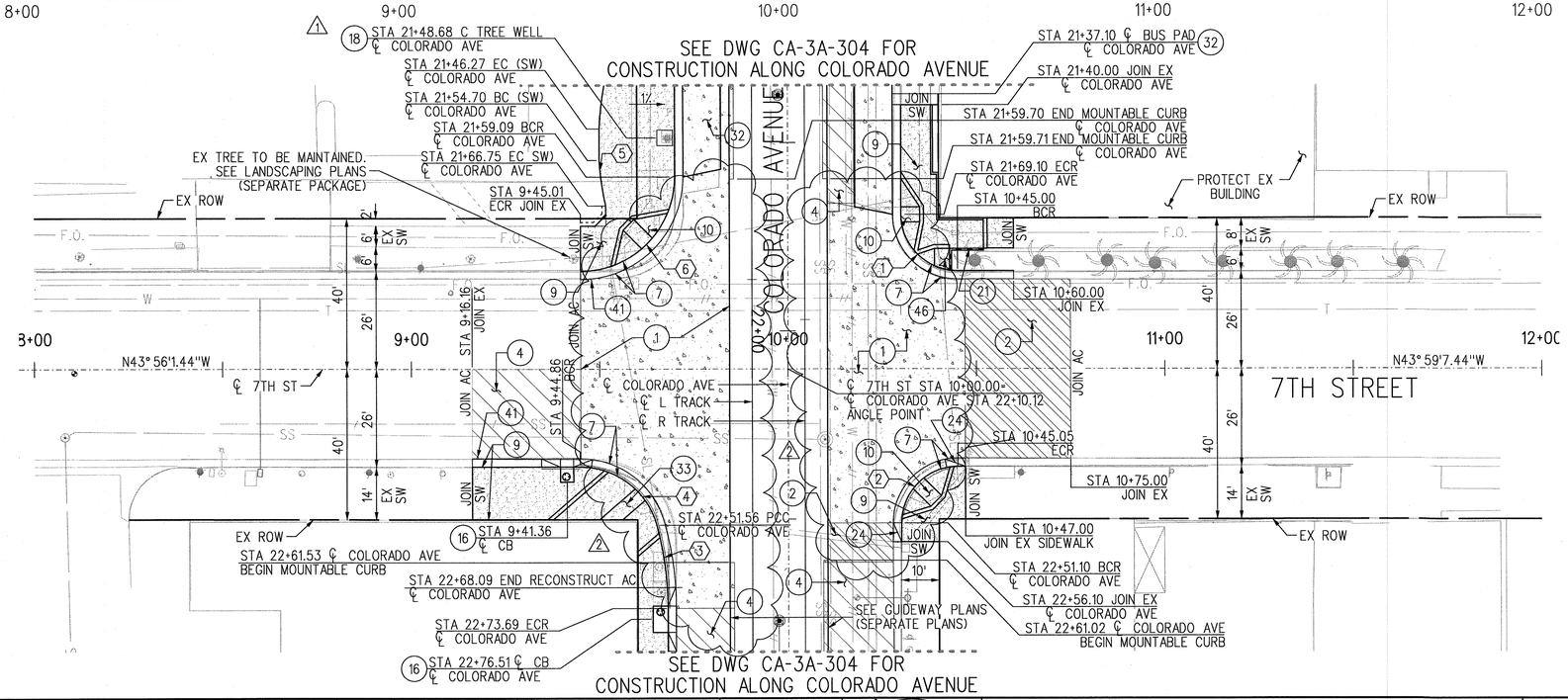

CONSTRUCTION NOTES

1. RECONSTRUCT 9" PCC OVER 4" CRUSHED MISCELLANEOUS BASE PER GEOTECHNICAL REPORT AND SPECIFICATIONS.
2. RECONSTRUCT ASPHALT CONCRETE PAVEMENT TO MATCH EXISTING SECTION (8" MIN ASPHALT CONCRETE PAVEMENT). EXISTING BASE OR SUBGRADE SOILS SHALL BE COMPACTED TO 90% MINIMUM RELATIVE COMPACTION.
4. CONSTRUCT VARIABLE DEPTH ASPHALT CONCRETE OVERLAY (1.5" MINIMUM) PER GEOTECHNICAL REPORT AND SPECIFICATIONS.
7. CONSTRUCT CURB AND GUTTER PER CITY OF SANTA MONICA STD. DETAIL SM6; STD. CURB HEIGHT UNLESS NOTED OTHERWISE ON THE PLANS.
9. CONSTRUCT 4" P.C.C. SIDEWALK. CONSTRUCT SIDEWALK JOINTS PER SPPWC STD. 112-2.
10. CONSTRUCT CURB RAMP PER SPPWC STD. 111-4, CASE A, TYPE 1. SEE CURB RAMP DETAIL SHEETS.
16. CONSTRUCT OR MODIFY INLET PER DRAINAGE PLANS.
18. INSTALL TREE WELL. SEE LANDSCAPE PLANS FOR DETAILS. (SEPARATE PACKAGE)
21. CONSTRUCT HANDRAIL PER SPPWC STD. 606-3, TYPE A.
24. CONSTRUCT LOCAL DEPRESSION. MATCH EXISTING.
32. CONSTRUCT P.C.C. BUS PAD PER CITY OF SANTA MONICA STD. DETAIL SM2.
33. CONSTRUCT CURB RAMP PER SPPWC STD. 111-4, CASE B, TYPE 2. SEE CURB RAMP DETAIL SHEET C-3C-308.
41. CONSTRUCT PAVEMENT CLOSURE PER CONSTRUCTION DETAIL SHEET CC-3C-301, DETAIL 1.
46. CONSTRUCT CURB RAMP PER SPPWC STD. 11-4, CASE D, TYPE 2.

NOTES

1.) SEE SHEETS G-301 TO G-307 FOR GENERAL NOTES, ABBREVIATIONS, SYMBOLS, AND ADDITIONAL LEGENDS.

2.) THE CONTRACTOR SHALL VERIFY TIE-IN ELEVATIONS PRIOR TO CONSTRUCTION, AND SHALL NOTIFY THE ENGINEER OF ANY DISCREPANCIES.

LEGEND

- RECONSTRUCT AC PAVEMENT
- CONSTRUCT AC PAVEMENT
- CONSTRUCT VARIABLE DEPTH AC OVERLAY
- CONSTRUCT CONCRETE PAVEMENT
- CONSTRUCT CONCRETE SIDEWALK
- CONSTRUCT VARIALBE DEPTH AC OVERLAY (4" MINIMUM)
- INSTALL CSM PAVERS

SRJV
SEP 04 2014
ISSUED FOR CONSTRUCTION

20' 10' 0 20' 40'

REV	DATE	BY	APP	REG NO	EXPIRES	SEAL HOLDER	DESCRIPTION
2	7/11/14	FH	DJA	C53031	6/30/15	DARREN J. ADRIAN	ECI 118
1	9/11/13	FH	DJA	C53031	6/30/15	DARREN J. ADRIAN	ECI 22
0	10/19/12	FH	DJA	C53031	6/30/13	DARREN J. ADRIAN	APPROVED FOR CONSTRUCTION

REVISION DATES (DESIGN STAGE ONLY)

DESIGNED BY R. BROWNE
DRAWN BY J. GATZA
CHECKED BY F. HOFFMANN
IN CHARGE D. ADRIAN
DATE 10/19/12

REGISTERED PROFESSIONAL ENGINEER DARREN J. ADRIAN No. C53031 Exp. 06-30-15 CIVIL STATE OF CALIFORNIA

Exposition Metro Line Construction Authority
Expo
444 South Flower Street
Suite 2200
Los Angeles, CA 90071
TEL (213) 443-7463
FAX (213) 362-9481
EXPO SKANSKA RADOS

PARSONS BRINCKERHOFF
Korbin Kim and Associates, Inc
865 SOUTH FIGUEROA STREET SUITE 801 LOS ANGELES, 90017 TEL: (213) 261-4040

EXPOSITION LRT PROJECT- PHASE 2
STREET IMPROVEMENTS
7TH STREET
PLAN & PROFILE
STA 8+00 TO 12+00

Exposition Construction Authority Approved for Construction Drawings - AFC
SEP 02 2014

CONTRACT NO XP8902-002
DRAWING NO CA-3C-307 REV 2
SCALE HOR: 1"=20' VERT: 1"=4'
SHEET NO 0F

SCALES HORIZ SCALE: 1"=20' VERT SCALE: 1"=4'
SHEET
INDEX NUMBER

justin.gatza 11:50:14 AM 7/11/2014
Plot Driver=EXPO2-PDF-Full-BW.plt Pentable=EXPO2-PENTABLE.tbl
C:\Users\justin.gatza\Desktop\EXPORT\expo2-ca-3c-307.plg

Sheet Version 2.01

REFERENCE:
SUBMITTED BY:
CITY DRAWING NO.
SHEET NO.: 0F
APPROVED BY: DATE: 8/29 2014
DENIS L. SOMAN, P.E., CITY ENGINEER
ENGINEERING CITY

REVIEWED: DATE: 20
REVIEWED: DATE: 8/29 2014
REVIEWED: DATE: 8/29 2014

NO. DATE BY DESCRIPTION
REVISIONS

City of Santa Monica
Department of Public Works
1437 4th Street, Suite 300 Santa Monica, CA 90401
TEL. (310)458-8721 FAX. (310)393-4425
e-mail : smengineering@smgov.net

Plotted by: justin.gatza 7/11/2014 C:\Users\justin.gatza\Desktop\EXPORT\expo2-ca-3c-307.plg

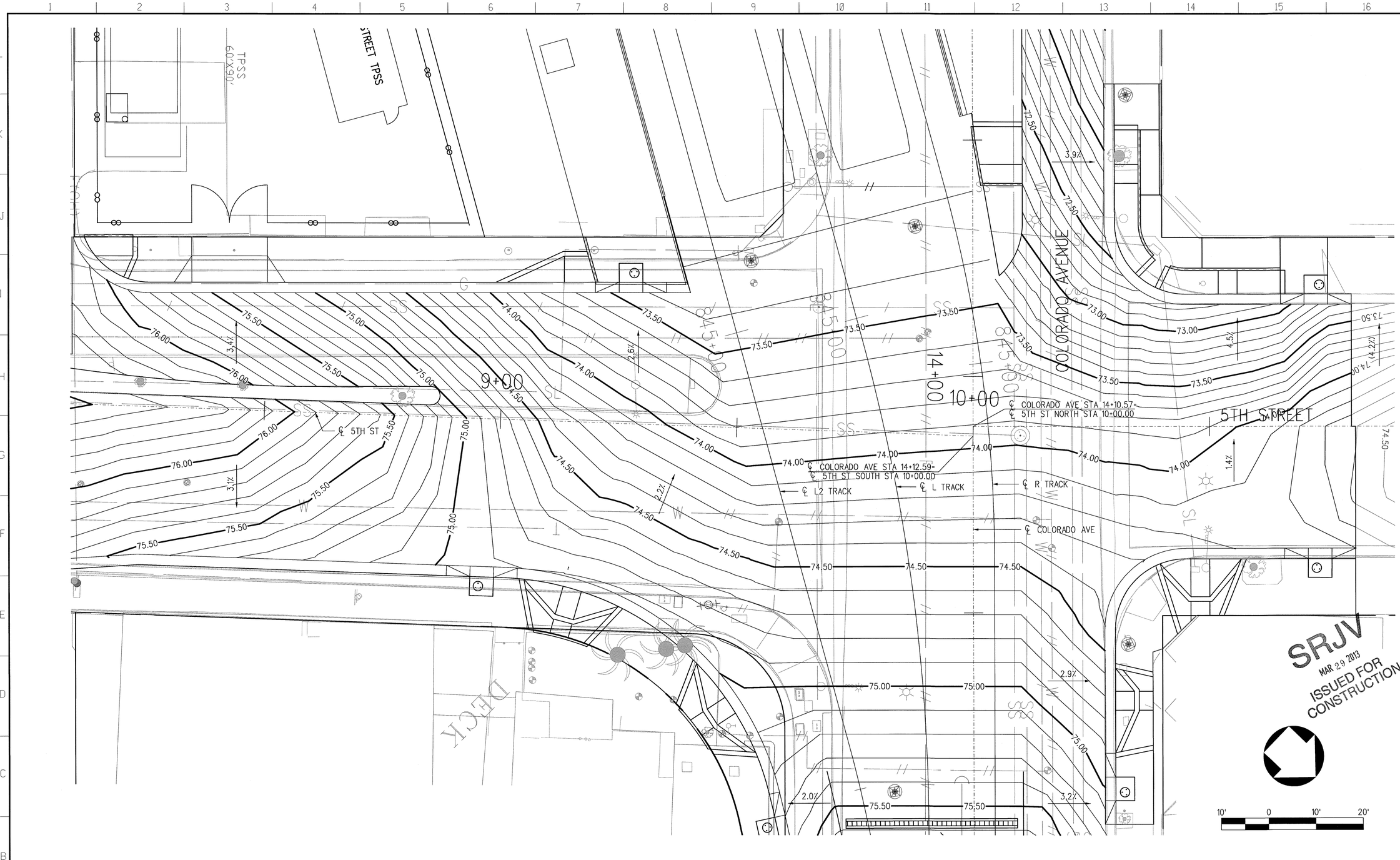

REV	DATE	BY	APP	REG NO	EXPIRES	SEAL HOLDER	DESCRIPTION
0	10/19/12	FH	DJA	C53031	06-30-13	DARREN J. ADRIAN	APPROVED FOR CONSTRUCTION

DESIGNED BY R. BROWNE
DRAWN BY R. BROWNE
CHECKED BY F. HOFFMANN
IN CHARGE D. ADRIAN
DATE 10/19/12

REGISTERED PROFESSIONAL ENGINEER DARREN J. ADRIAN No. C53031 Exp. 06-30-13 CIVIL STATE OF CALIFORNIA

Exposition Metro Line Construction Authority
Expo

EXPO SKANSKA RADOS
444 South Flower Street
Suite 2200
Los Angeles, CA 90071
TEL (213) 443-7463
FAX (213) 362-9481

PARSONS BRINCKERHOFF
CURRENT STATUS
Kimley-Horn and Associates, Inc.
685 South Figueroa Street
Suite 1040
Los Angeles, CA 90017
Tel: (213) 261-4040

EXPOSITION LRT PROJECT- PHASE 2
STREET IMPROVEMENTS
COLORADO AVENUE
INTERSECTION DETAILS
5TH STREET

Exposition Construction Authority Approved for Construction Drawings - AFC
MAR 28 2013

CONTRACT NO XP8902-002
DRAWING NO C-3C-301 REV 0
SCALE 1"=10'
SHEET NO 30 OF 108

justin.gatza 9:49:06 PM 10/17/2012
Plot Driver=EXPO2-PDF-Full-BW.plt Pentable=EXPO2-PENTABLE.tbl
K:\LDT_RDWY\094617000 - Expo Ph 2\Working\04 BATCH PLOT\Temp Export Files from PW\Roadway\expo2-c-3c-301.plg

SCALES HORIZ SCALE: 1"=10' VERT SCALE: NO SCALE
SHEET
INDEX NUMBER

REVISION DATES (DESIGN STAGE ONLY)

REFERENCE:
SUBMITTED BY: Daryl DeVinnie
CITY DRAWING NO. 9302
SHEET NO.: 30 OF 108
DATE: 3-11 2013
APPROVED BY: LEON E. SWAIN, P.E., CITY ENGINEER
ENGINEERING

REVIEWED: DATE: 3-11 2013
REVIEWED: DATE: 20
REVIEWED: DATE: 20
CITY

NO.	DATE	BY	DESCRIPTION	APPROVED
			REVISIONS	

City of Santa Monica
Department of Public Works
1437 4th Street, Suite 300 Santa Monica, CA 90401
TEL. (310)458-8721 FAX. (310)393-4425
e-mail : smengineering@smgov.net

Plotted by: justin.gatza 10/17/2012 K:\LDT_RDWY\094617000 - Expo Ph 2\Working\04 BATCH PLOT\Temp Export Files from PW\Roadway\expo2-c-3c-301.plg

Sheet Version 2.01

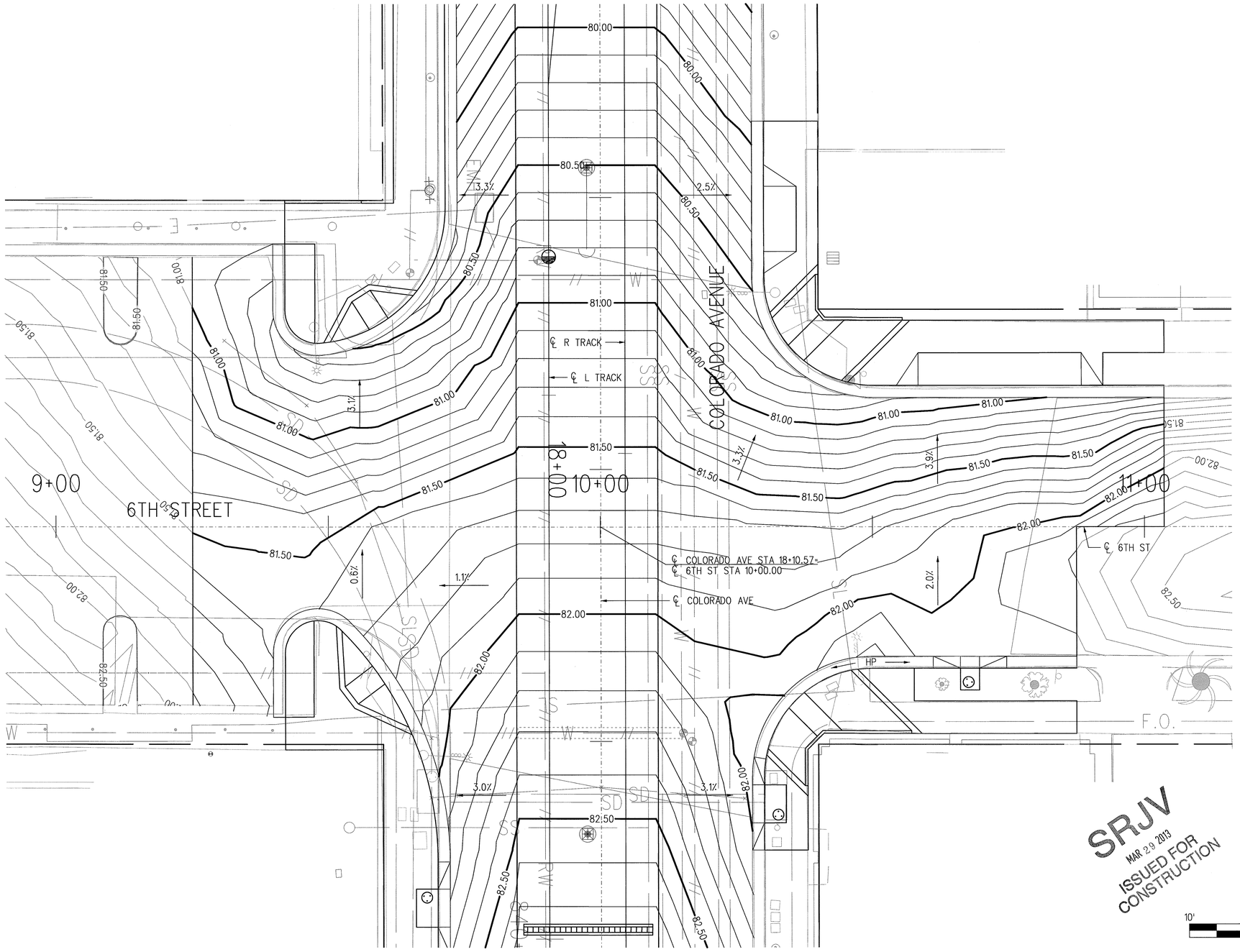

REV	DATE	BY	APP	REG NO	EXPIRES	SEAL HOLDER	DESCRIPTION
0	10/19/12	FH	DJA	C53031	06-30-13	DARREN J. ADRIAN	APPROVED FOR CONSTRUCTION

DESIGNED BY R. BROWNE
DRAWN BY R. BROWNE
CHECKED BY F. HOFFMANN
IN CHARGE D. ADRIAN
DATE 10/19/12

REGISTERED PROFESSIONAL ENGINEER — DARREN J. ADRIAN — No. C53031 — Exp. 06-30-13 — CIVIL — STATE OF CALIFORNIA

Exposition Metro Line Construction Authority
Expo
EXPO SKANSKA RADOS
444 South Flower Street
Suite 2200
Los Angeles, CA 90071
TEL (213) 443-7463
FAX (213) 362-9481

PARSONS BRINCKERHOFF
Kimley-Horn and Associates, Inc.
800 SOUTH FIGUEROA STREET SUITE 1040 LOS ANGELES, CA 90017 TEL: (213) 261-4040

CURRENT STATUS

EXPOSITION LRT PROJECT- PHASE 2
STREET IMPROVEMENTS
COLORADO AVENUE
INTERSECTION DETAILS
6TH STREET

Exposition Construction Authority Approved for Construction Drawings - AFC
MAR 28 2013

CONTRACT NO XP8902-002
DRAWING NO C-3C-302 REV 0
SCALE 1"=10'
SHEET NO 31 OF 108

justin.gatza 9:49:07 PM 10/17/2012
Plot Driver=EXPO2-PDF-Full-BW.plt Pentable=EXPO2-PENTABLE.tbl
K:\LDT_RDWY\094617000 - Expo Ph 2\Working\04 BATCH PLOT\Temp Export Files from PW\Roadway\expo2-c-3c-302.plg

SCALES — HORIZ SCALE: 1"=10' — VERT SCALE: NO SCALE
SHEET
INDEX NUMBER

REVISION DATES (DESIGN STAGE ONLY)

NO.	DATE	BY	DESCRIPTION

REVISIONS

REFERENCE:
SUBMITTED BY: Dwy de Veirs
CITY DRAWING NO. 9302
SHEET NO. 31 OF 108
DATE: 3-11 20 13
APPROVED BY: LEON E. SWAIN, P.E., CITY ENGINEER
DATE: 3-11 20 13
REVIEWED: DATE: 20
REVIEWED: DATE: 20
REVIEWED: DATE: 20
APPROVED

City of Santa Monica
Department of Public Works
1437 4th Street, Suite 300 Santa Monica, CA 90401
TEL. (310)458-8721 FAX. (310)393-4425
e-mail: smengineering@smgov.net

Plotted by: justin.gatza 10/17/2012 K:\LDT_RDWY\094617000 - Expo Ph 2\Working\04 BATCH PLOT\Temp Export Files from PW\Roadway\expo2-c-3c-302.plg

Sheet Version 2.01

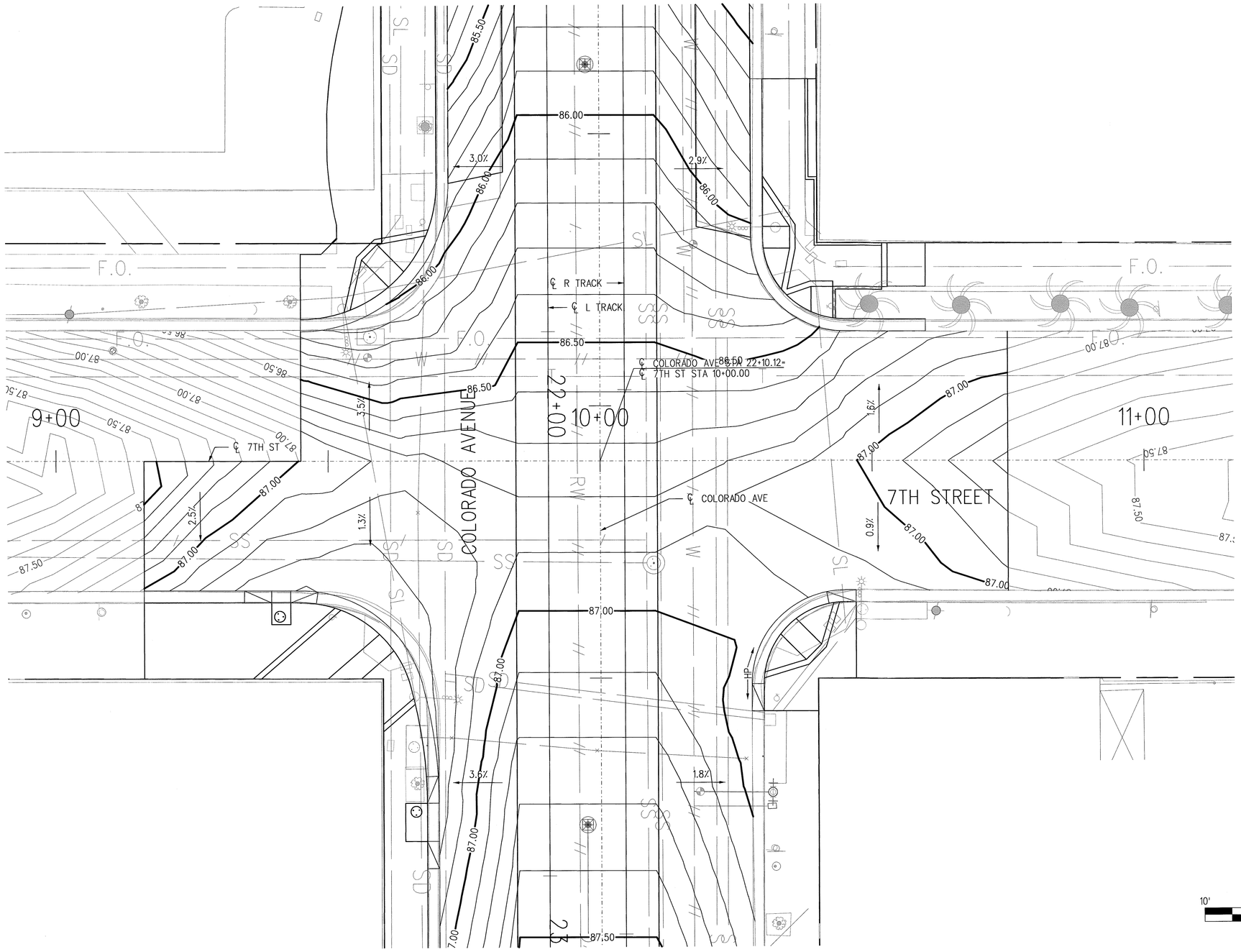

REV	DATE	BY	APP	REG NO	EXPIRES	SEAL HOLDER	DESCRIPTION
0	10/19/12	FH	DJA	C53031	06-30-13	DARREN J. ADRIAN	APPROVED FOR CONSTRUCTION

REVISION DATES (DESIGN STAGE ONLY)

DESIGNED BY R. BROWNE
DRAWN BY R. BROWNE
CHECKED BY F. HOFFMANN
IN CHARGE D. ADRIAN
DATE 10/19/12

REGISTERED PROFESSIONAL ENGINEER — DARREN J. ADRIAN — No. C53031 — Exp. 06-30-13 — CIVIL — STATE OF CALIFORNIA

Exposition Metro Line Construction Authority
Expo

EXPO SKANSKA RADOS
444 South Flower Street
Suite 2200
Los Angeles, CA 90071
TEL (213) 443-7463
FAX (213) 362-9481

PARSONS BRINCKERHOFF
Kimley-Horn and Associates, Inc.
CURRENT STANDARD

EXPOSITION LRT PROJECT- PHASE 2
STREET IMPROVEMENTS
COLORADO AVENUE
INTERSECTION DETAILS
7TH STREET

Exposition Construction Authority Approved for Construction Drawings - AFC
MAR 28 2013

CONTRACT NO XP8902-002
DRAWING NO C-3C-303 REV 0
SCALE 1"=10'
SHEET NO 32 OF 108

justin.gatza 9:49:08 PM 10/17/2012
Plot Driver=EXPO2-PDF-Full-BW.plt
Pentable=EXPO2-PENTABLE.tbl
K:\LDT_RDWY\094617000 - Expo Ph 2\Working\04 BATCH PLOT\Temp Export Files from PW\Roadway\expo2-c-3c-303.plg

SCALES — HORIZ SCALE: 1"=10' — VERT SCALE: NO SCALE
SHEET
INDEX NUMBER

Sheet Version 2.01

NO.	DATE	BY	DESCRIPTION

REVISIONS

APPROVED: CITY

REFERENCE:
SUBMITTED BY: Dwayne DeVaine
CITY DRAWING NO. 9302
SHEET NO. 32 OF 108
DATE: 3-11 2013
APPROVED BY: LEON E. SWANN P.E., CITY ENGINEER — ENGINEERING
REVIEWED: DATE: 20__
REVIEWED: DATE: 20__
REVIEWED: DATE: 3-11 2013

City of Santa Monica
Department of Public Works
1437 4th Street, Suite 300 Santa Monica, CA 90401
TEL. (310)458-8721 FAX. (310)393-4425
e-mail : smengineering@smgov.net

Plotted by: justin.gatza 10/17/2012 K:\LDT_RDWY\094617000 - Expo Ph 2\Working\04 BATCH PLOT\Temp Export Files from PW\Roadway\expo2-c-3c-303.plg

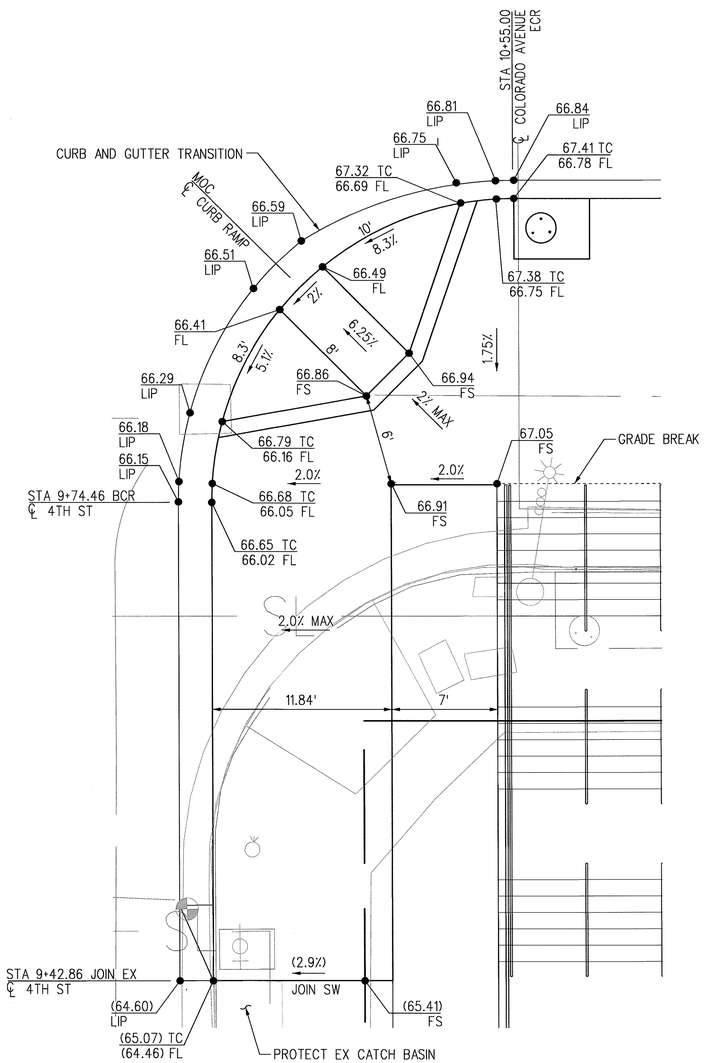

CURB RAMP DETAIL SE CORNER
COLORADO AVE & 4TH ST
PLAN
1"=5'

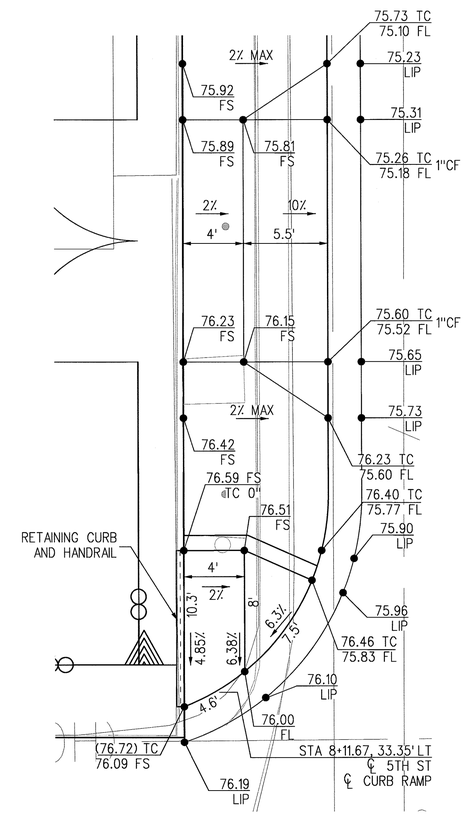

CURB RAMP DETAIL
℄ 5TH ST STA 8+11.67
PLAN
1"=5'

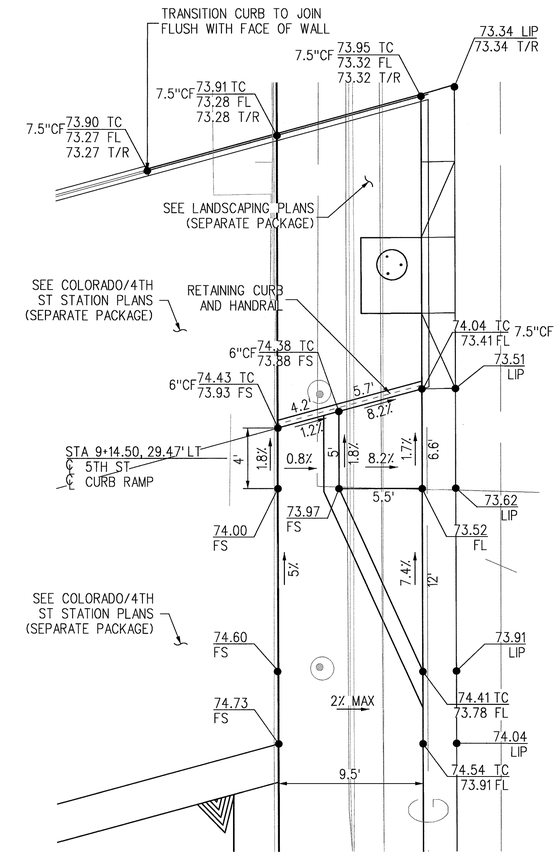

CURB RAMP DETAIL
℄ 5TH ST STA 9+14.50
PLAN
1"=5'

SRJV
MAR 29 2013
ISSUED FOR CONSTRUCTION

5' 0 5' 10'

REV	DATE	BY	APP	REG NO	EXPIRES	SEAL HOLDER	DESCRIPTION
0	10/19/12	FH	DJA	C53031	06-30-13	DARREN J. ADRIAN	APPROVED FOR CONSTRUCTION

REVISION DATES (DESIGN STAGE ONLY)

DESIGNED BY J. GATZA
DRAWN BY J. GATZA
CHECKED BY F. HOFFMANN
IN CHARGE D. ADRIAN
DATE 10/19/12

REGISTERED PROFESSIONAL ENGINEER — DARREN J. ADRIAN — No. C53031 — Exp. 06-30-13 — CIVIL — STATE OF CALIFORNIA

Exposition Metro Line Construction Authority
Expo
EXPO SKANSKA RADOS
444 South Flower Street
Suite 2200
Los Angeles, CA 90071
TEL (213) 443-7463
FAX (213) 362-9481

PARSONS BRINCKERHOFF
Kinney-Parr and Associates, Inc.
840 SOUTH FIGUEROA STREET SUITE 1040 LOS ANGELES, CA 90017 TEL: (213) 261-4040

CONTRACT NOT FOR CONSTRUCTION

EXPOSITION LRT PROJECT- PHASE 2
STREET IMPROVEMENTS
4TH STREET & 5TH STREET
PLAN
CURB RAMP DETAILS

Exposition Construction Authority
Approved for Construction
Drawings - AFC
MAR 28 2013

CONTRACT NO XP8902-002
DRAWING NO C-3C-304
REV 0
SCALE 1"=5'
SHEET NO 33 OF 108

SCALES: HORIZ SCALE: 1"=5' VERT SCALE: NO SCALE
SHEET
INDEX NUMBER

justin.gatza 9:49:09 PM 10/17/2012
Plot Driver=EXPO2-PDF-Full-BW.plt Pentable=EXPO2-PENTABLE.tbl
K:\LDT_RDWY\094617000 - Expo Ph 2\Working\04 BATCH PLOT\Temp Export Files from PW\Roadway\expo2-c-3c-304.plg

Sheet Version 2.01

NO.	DATE	BY	DESCRIPTION	APPROVED

REVISIONS

REFERENCE: DATE: 20__ REVIEWED:
SUBMITTED BY: DATE: 20__ REVIEWED:
APPROVED BY: LEON E. SWANN, P.E., CITY ENGINEER — DATE: 3-11 20 13 — REVIEWED: CITY ENGINEERING

CITY DRAWING NO. 9302
SHEET NO. 33 OF 108

City of Santa Monica
Department of Public Works
1437 4th Street, Suite 300 Santa Monica, CA 90401
TEL. (310)458-8721 FAX. (310)393-4425
e-mail : smengineering@smgov.net

Plotted by: justin.gatza 10/17/2012 K:\LDT_RDWY\094617000 - Expo Ph 2\Working\04 BATCH PLOT\Temp Export Files from PW\Roadway\expo2-c-3c-304.plg

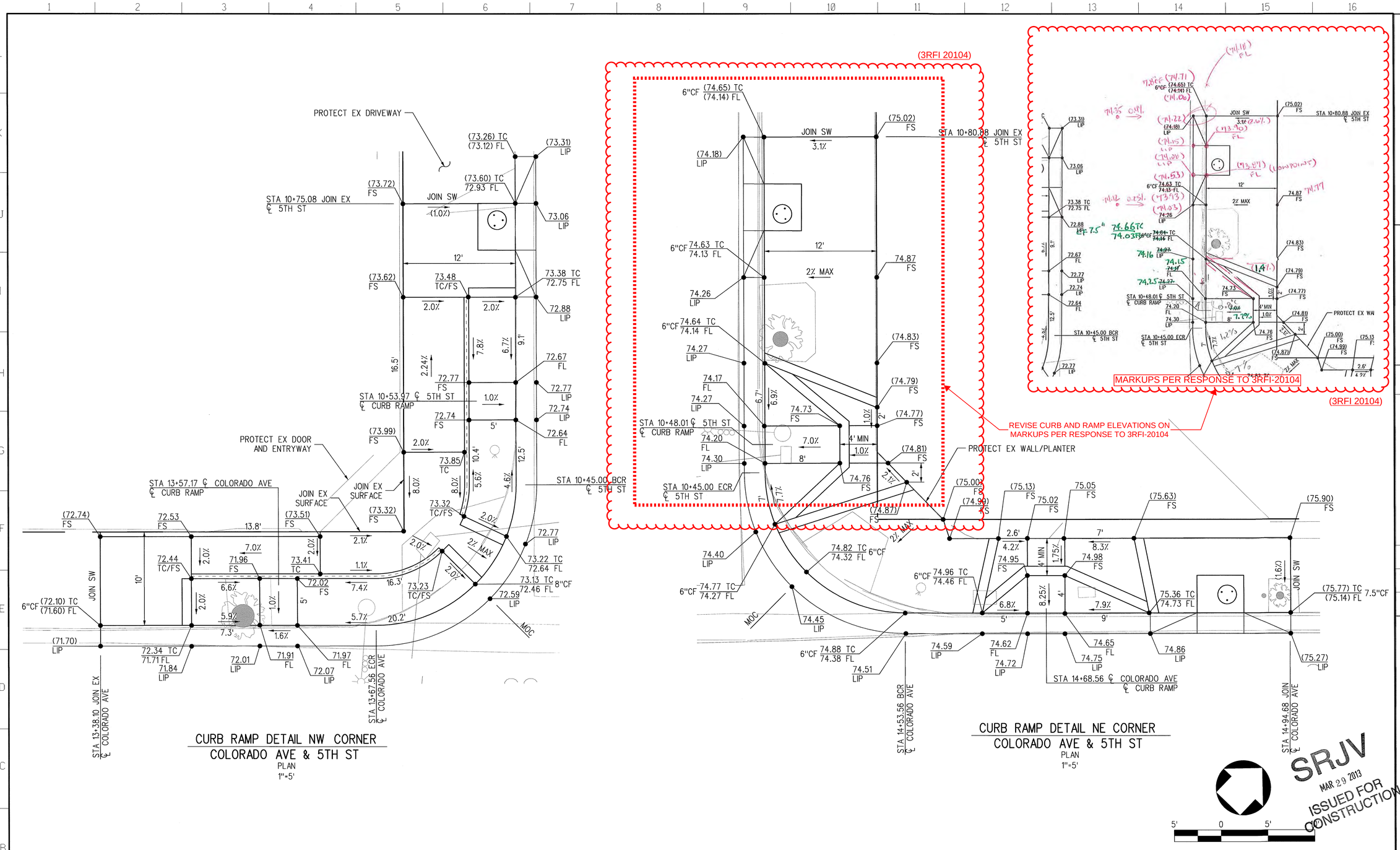

REV	DATE	BY	APP	REG NO	EXPIRES	SEAL HOLDER	DESCRIPTION
0	10/19/12	FH	DJA	C53031	06-30-13	DARREN J. ADRIAN	APPROVED FOR CONSTRUCTION

REVISION DATES (DESIGN STAGE ONLY)

DESIGNED BY A. AZEVEDO
DRAWN BY J. GATZA
CHECKED BY F. HOFFMANN
IN CHARGE D. ADRIAN
DATE 10/19/12

REGISTERED PROFESSIONAL ENGINEER — DARREN J. ADRIAN — No. C53031 — Exp. 06-30-13 — CIVIL — STATE OF CALIFORNIA

Exposition Metro Line Construction Authority
Expo
EXPO SKANSKA RADOS
444 South Flower Street
Suite 2200
Los Angeles, CA 90071
TEL (213) 443-7463
FAX (213) 362-9481

PARSONS BRINCKERHOFF
Kimley-Horn and Associates, Inc.
980 SOUTH FIGUEROA STREET SUITE 1040 LOS ANGELES, CA 90017 TEL: (213) 261-4040

CURRENT STATUS

Exposition Construction Authority
Approved for Construction
Drawings - AFC
MAR 28 2013

EXPOSITION LRT PROJECT- PHASE 2
STREET IMPROVEMENTS
COLORADO AVENUE & 5TH STREET
PLAN
CURB RAMP DETAILS

CONTRACT NO XP8902-002
DRAWING NO C-3C-305 REV 0
SCALE 1"=5'
SHEET NO 34 OF 108

justin.gatza 9:49:10 PM 10/17/2012
Plot Driver=EXPO2-PDF-Full-BW.plt Pentable=EXPO2-PENTABLE.tbl
K:\LDT_RDWY\094617000 - Expo Ph 2\Working\04 BATCH PLOT\Temp Export Files from PW\Roadway\expo2-c-3c-305.plg

SCALES — HORIZ SCALE: 1"=5' — VERT SCALE: NO SCALE
SHEET
INDEX NUMBER

REFERENCE :
SUBMITTED BY: Doug Jenkins
CITY DRAWING NO. 9302
SHEET NO.: 34 OF 108
DATE : 3-11 20 13
APPROVED BY : LEON E. SWAIN, P.E. CITY ENGINEER — ENGINEERING
REVIEWED : DATE : 20 — DATE : 20 — DATE : 3-11 20 13 — CITY

NO.	DATE	BY	DESCRIPTION	APPROVED
			REVISIONS	

City of Santa Monica
Department of Public Works
1437 4th Street, Suite 300 Santa Monica, CA 90401
TEL. (310)458-8721 FAX. (310)393-4425
e-mail : smengineering@smgov.net

Plotted by: justin.gatza 10/17/2012 K:\LDT_RDWY\094617000 - Expo Ph 2\Working\04 BATCH PLOT\Temp Export Files from PW\Roadway\expo2-c-3c-305.plg

Sheet Version 2.dff

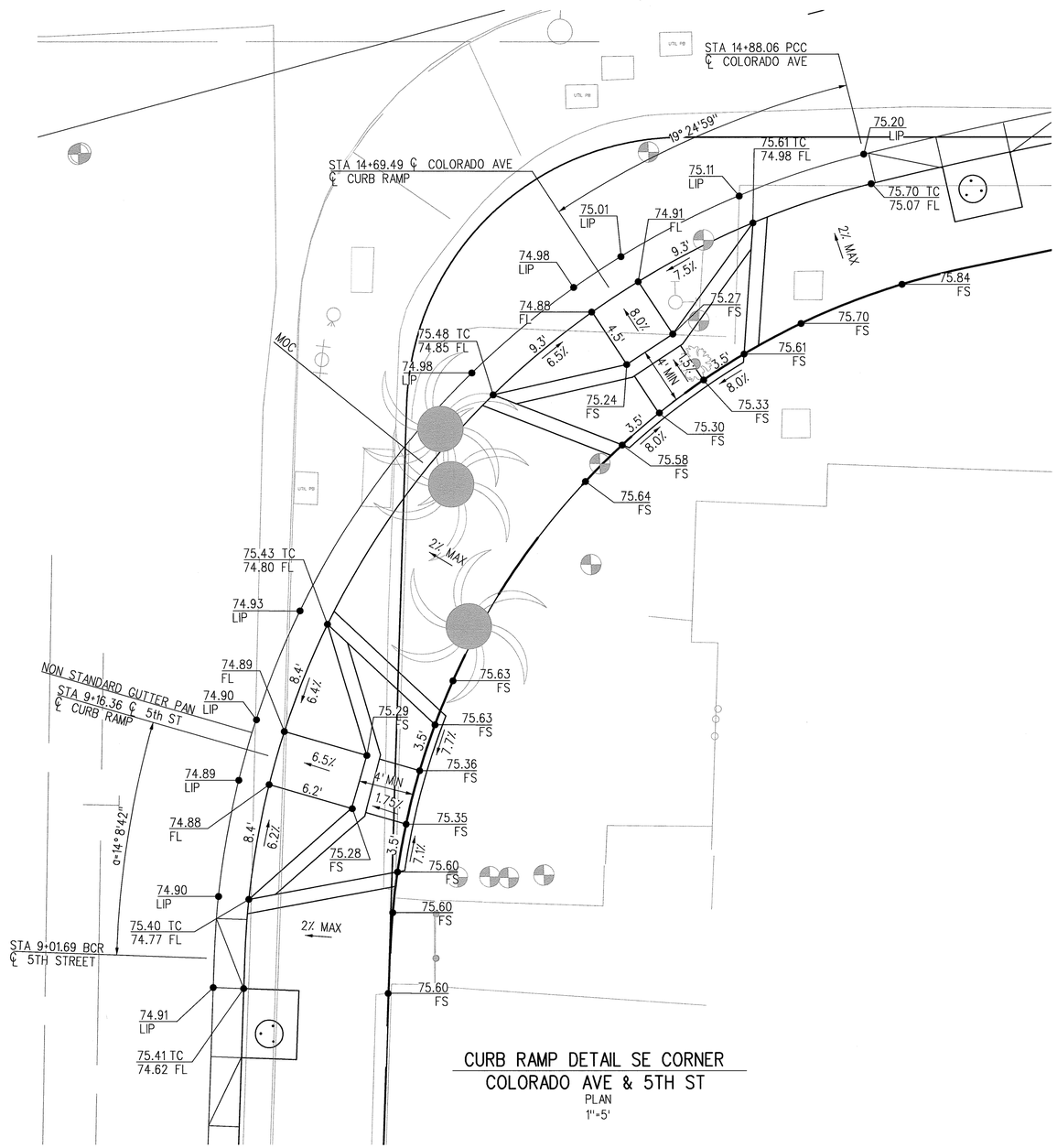

CURB RAMP DETAIL SE CORNER
COLORADO AVE & 5TH ST
PLAN
1"=5'

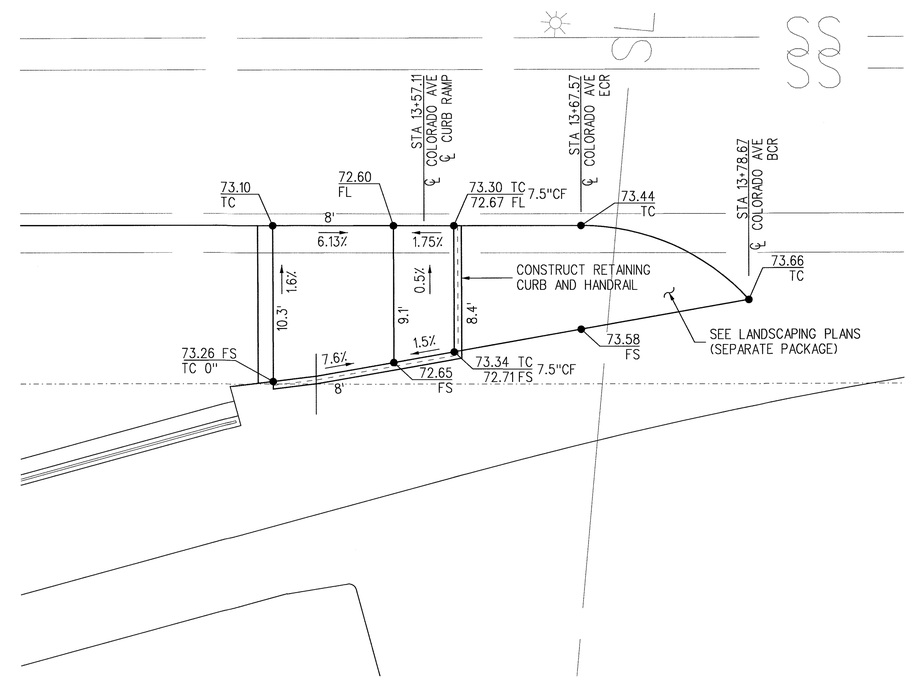

CURB RAMP DETAIL SW CORNER
COLORADO AVE & 5TH ST
PLAN
1"=5'

SRJV
MAR 29 2013
ISSUED FOR CONSTRUCTION

5' 0 5' 10'

REV	DATE	BY	APP	REG NO	EXPIRES	SEAL HOLDER	DESCRIPTION
0	10/19/12	FH	DJA	C53031	06-30-13	DARREN J. ADRIAN	APPROVED FOR CONSTRUCTION

DESIGNED BY J. GATZA
DRAWN BY J. GATZA
CHECKED BY F. HOFFMANN
IN CHARGE D. ADRIAN
DATE 10/19/12

REGISTERED PROFESSIONAL ENGINEER
DARREN J. ADRIAN
No. C53031
Exp. 06-30-13
CIVIL
STATE OF CALIFORNIA

Exposition Metro Line Construction Authority
Expo

EXPO SKANSKA RADOS
444 South Flower Street
Suite 2200
Los Angeles, CA 90071
TEL (213) 443-7463
FAX (213) 362-9481

PARSONS BRINCKERHOFF
Kimley-Horn and Associates, Inc.
600 SOUTH LIGUEROA STREET
SUITE 1040
LOS ANGELES, CA 90017
TEL: (213) 261-4040

CURRENT STATUS

EXPOSITION LRT PROJECT- PHASE 2
STREET IMPROVEMENTS
COLORADO AVENUE & 5TH STREET
PLAN
CURB RAMP DETAILS

Exposition Construction Authority
Approved for Construction
Drawings - AFC
MAR 28 2013

CONTRACT NO XP8902-002
DRAWING NO C-3C-306
REV 0
SCALE 1"=5'
SHEET NO 35 OF 108

justin.gatza 9:49:11 PM 10/17/2012
Plot Driver=EXPO2-PDF-Full-BW.plt Pentable=EXPO2-PENTABLE.tbl
K:\LDT_RDWY\094617000 - Expo Ph 2\Working\04 BATCH PLOT\Temp Export Files from PW\Roadway\expo2-c-3c-306.plg

SCALES
HORIZ SCALE: 1"=5'
VERT SCALE: NO SCALE
SHEET
INDEX NUMBER

REVISION DATES (DESIGN STAGE ONLY)

REFERENCE :
SUBMITTED BY: Dwy de Vinci
APPROVED BY : LEON E. SWAIN, P.E., CITY ENGINEER
CITY DRAWING NO. 9302
SHEET NO.: 35 OF 108
DATE : 3-11 2013
REVIEWED : DATE : 3-11 2013
REVIEWED : DATE : 20
REVIEWED : DATE : 20
CITY ENGINEERING

NO.	DATE	BY	DESCRIPTION	APPROVED
			REVISIONS	

City of Santa Monica
Department of Public Works
1437 4th Street, Suite 300 Santa Monica, CA 90401
TEL. (310)458-8721 FAX. (310)393-4425
e-mail : smengineering@smgov.net

Plotted by: justin.gatza 10/17/2012 K:\LDT_RDWY\094617000 - Expo Ph 2\Working\04 BATCH PLOT\Temp Export Files from PW\Roadway\expo2-c-3c-306.plg

Sheet Version 2.01

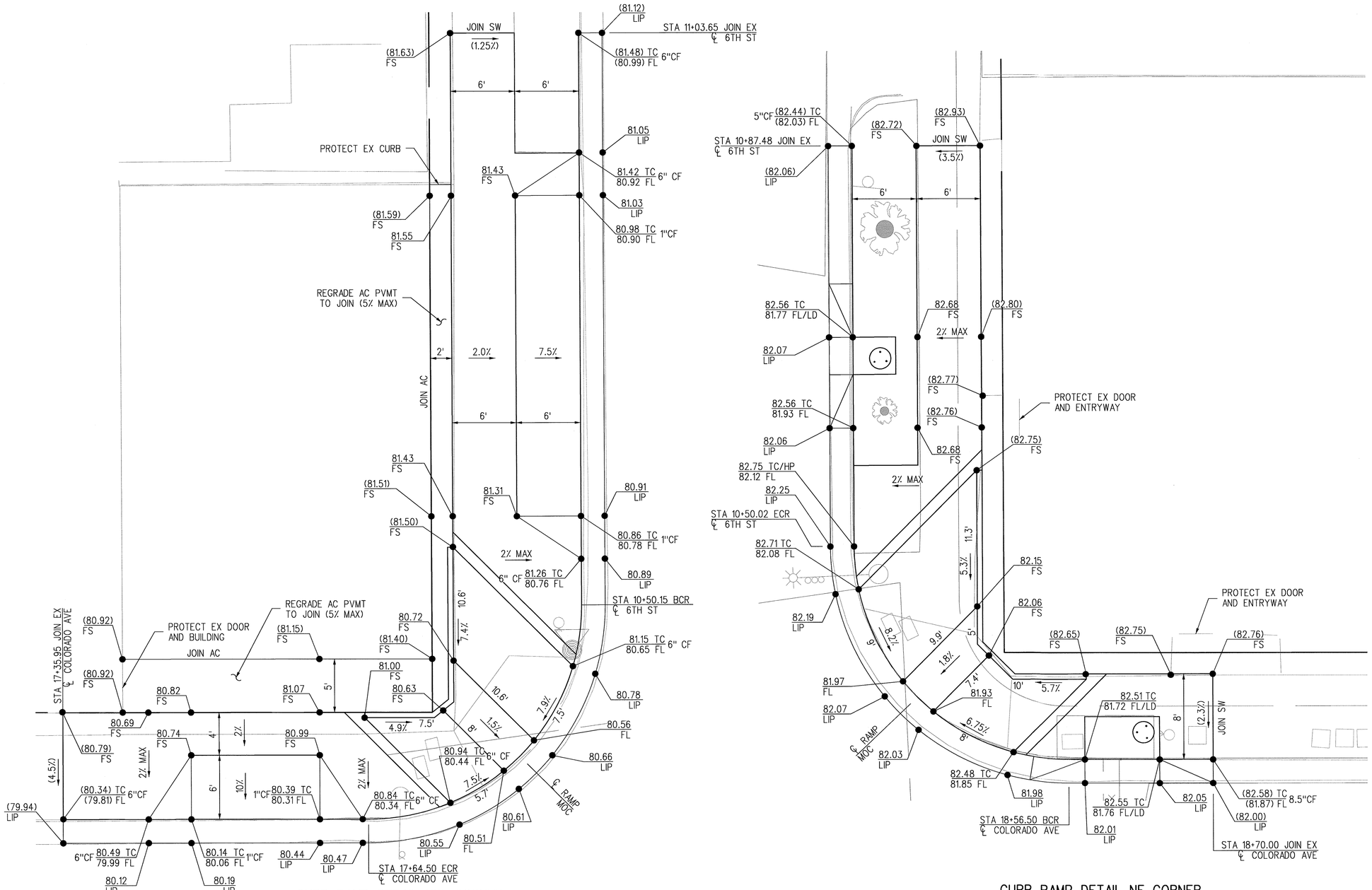

CURB RAMP DETAIL NW CORNER
COLORADO AVE & 6TH ST
PLAN
1"=5'

CURB RAMP DETAIL NE CORNER
COLORADO AVE & 6TH ST
PLAN
1"=5'

REV	DATE	BY	APP	REG NO	EXPIRES	SEAL HOLDER	DESCRIPTION
0	10/19/12	FH	DJA	C53031	06-30-13	DARREN J. ADRIAN	APPROVED FOR CONSTRUCTION

REVISION DATES (DESIGN STAGE ONLY)

DESIGNED BY A. AZEVEDO
DRAWN BY J. GATZA
CHECKED BY F. HOFFMANN
IN CHARGE D. ADRIAN
DATE 10/19/12

REGISTERED PROFESSIONAL ENGINEER DARREN J. ADRIAN No. C53031 Exp. 06-30-13 CIVIL STATE OF CALIFORNIA

Exposition Metro Line Construction Authority
Expo
EXPO SKANSKA RADOS
444 South Flower Street
Suite 2200
Los Angeles, CA 90071
TEL (213) 443-7463
FAX (213) 362-9481

PARSONS BRINCKERHOFF
Kimley-Horn and Associates, Inc.
660 SOUTH FIGUEROA STREET SUITE 1040 LOS ANGELES, CA 90017 TEL: (213) 261-6040

CURRENT STATUS

EXPOSITION LRT PROJECT- PHASE 2
STREET IMPROVEMENTS
COLORADO AVENUE & 6TH STREET
PLAN
CURB RAMP DETAILS

Exposition Construction Authority
Approved for Construction
Drawings - AFC
MAR 28 2013

CONTRACT NO XP8902-002
DRAWING NO C-3C-307 REV 0
SCALE 1"=5'
SHEET NO 36 OF 108

City of Santa Monica
Department of Public Works
1437 4th Street, Suite 300 Santa Monica, CA 90401
TEL. (310)458-8721 FAX. (310)393-4425
e-mail : smengineering@smgov.net

NO.	DATE	BY	DESCRIPTION
			REVISIONS

REFERENCE :
SUBMITTED BY: Doug DeVince
CITY DRAWING NO. 9302
SHEET NO. 36 OF 108
DATE : 3-11 2013
APPROVED BY : LEONE SWANN P.E. CITY ENGINEER
ENGINEERING

REVIEWED : DATE : 20__
REVIEWED : DATE : 20__
REVIEWED : DATE : 3-11 2013
CITY
APPROVED

justin.gatza 9:49:12 PM 10/17/2012
Plot Driver=EXPO2-PDF-Full-BW.plt Pentable=EXPO2-PENTABLE.tbl
K:\LDT_RDWY\094617000 - Expo Ph 2\Working\04 BATCH PLOT\Temp Export Files from PW\Roadway\expo2-c-3c-307.plg

SCALES HORIZ SCALE: 1"=5' VERT SCALE: NO SCALE
SHEET
INDEX NUMBER

Plotted by: justin.gatza 10/17/2012
K:\LDT_RDWY\094617000 - Expo Ph 2\Working\04 BATCH PLOT\Temp Export Files from PW\Roadway\expo2-c-3c-307.plg

Sheet Version 2.01

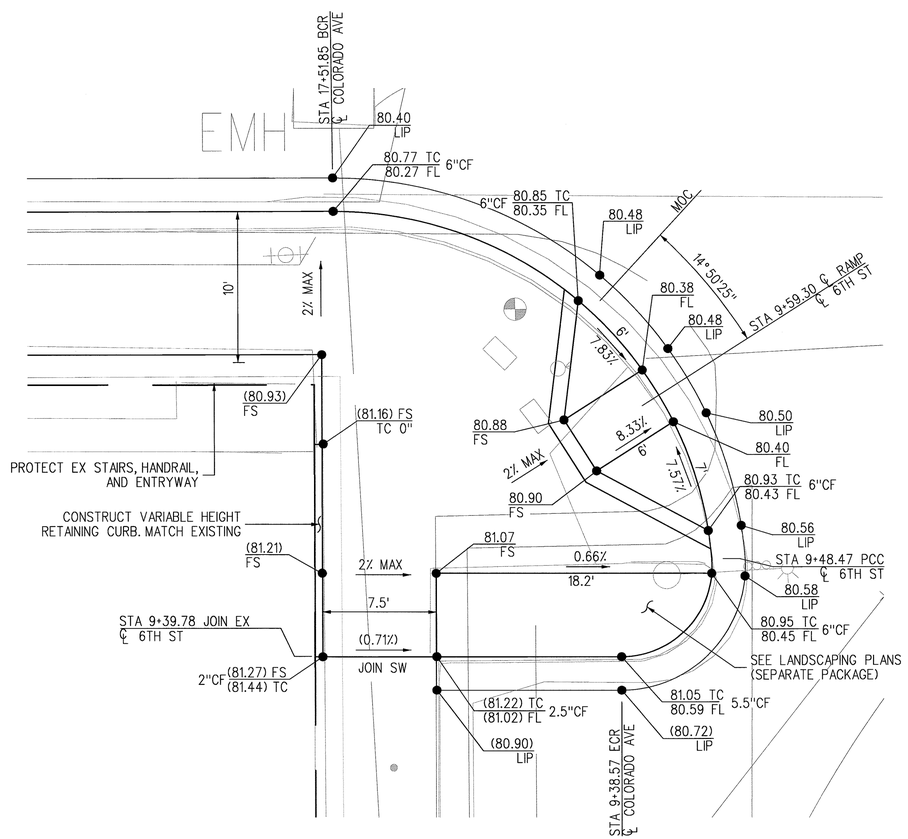

CURB RAMP DETAIL SW CORNER
COLORADO AVE & 6TH ST
PLAN
1"=5'

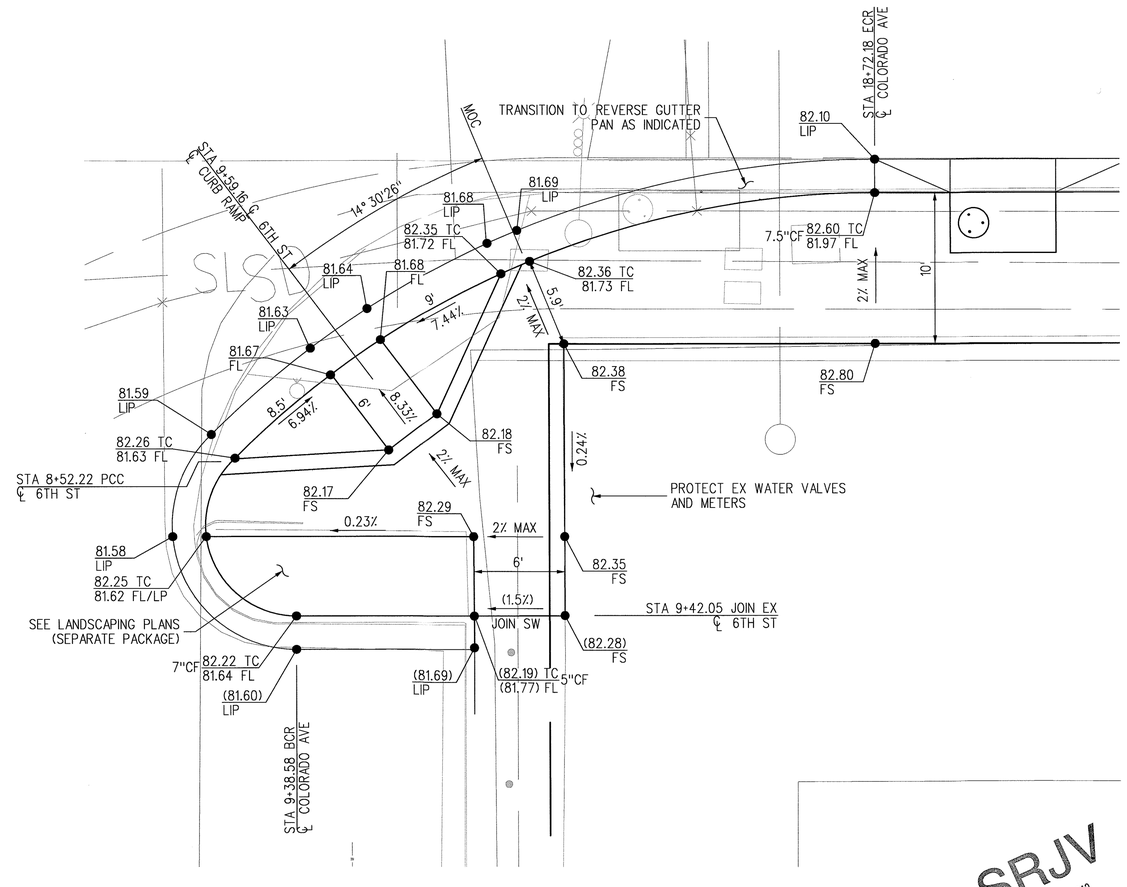

CURB RAMP DETAIL SE CORNER
COLORADO AVE & 6TH ST
PLAN
1"=5'

SRJV
MAR 29 2013
ISSUED FOR
CONSTRUCTION

5' 0 5' 10'

REV	DATE	BY	APP	REG NO	EXPIRES	SEAL HOLDER	DESCRIPTION
0	10/19/12	FH	DJA	C53031	06-30-13	DARREN J. ADRIAN	APPROVED FOR CONSTRUCTION

REVISION DATES (DESIGN STAGE ONLY)

DESIGNED BY A. AZEVEDO
DRAWN BY J. GATZA
CHECKED BY F. HOFFMANN
IN CHARGE D. ADRIAN
DATE 10/19/12

REGISTERED PROFESSIONAL ENGINEER DARREN J. ADRIAN No. C53031 Exp. 06-30-13 CIVIL STATE OF CALIFORNIA

Exposition Metro Line Construction Authority
Expo
EXPO SKANSKA RADOS
444 South Flower Street
Suite 2200
Los Angeles, CA 90071
TEL (213) 443-7463
FAX (213) 362-9481

PARSONS BRINCKERHOFF
Parsons Brinckerhoff and Associates, Inc.
888 SOUTH FIGUEROA STREET SUITE 1040 LOS ANGELES, CA 90017 TEL: (213) 261-4040

CURRENT STATUS

EXPOSITION LRT PROJECT- PHASE 2
STREET IMPROVEMENTS
COLORADO AVENUE & 6TH STREET
PLAN
CURB RAMP DETAILS

Exposition Construction Authority
Approved for Construction
Drawings - AFC
MAR 28 2013

CONTRACT NO XP8902-002
DRAWING NO C-3C-308 REV 0
SCALE 1"=5'
SHEET NO 37 OF 108

City of Santa Monica
Department of Public Works
1437 4th Street, Suite 300 Santa Monica, CA 90401
TEL. (310)458-8721 FAX. (310)393-4425
e-mail : smengineering@smgov.net

REFERENCE :
SUBMITTED BY: Dwy de Vivo
CITY DRAWING NO. 9302
SHEET NO: 37 OF 108
DATE : 3-11 2013
APPROVED BY : LEON E. SWAIN, P.E., CITY ENGINEER
ENGINEERING

REVIEWED : DATE : 20
REVIEWED : DATE : 20
REVIEWED : DATE : 3-11 2013
CITY

NO.	DATE	BY	DESCRIPTION

REVISIONS
APPROVED

Plotted by: justin.gatza 10/17/2012 K:\LDT_RDWY\094617000 - Expo Ph 2\Working\04 BATCH PLOT\Temp Export Files from PW\Roadway\expo2-c-3c-308.plg

justin.gatza 9:49:15 PM 10/17/2012
Plot Driver=EXPO2-PDF-Full-BW.plt Pentable=EXPO2-PENTABLE.tbl
K:\LDT_RDWY\094617000 - Expo Ph 2\Working\04 BATCH PLOT\Temp Export Files from PW\Roadway\expo2-c-3c-308.plg

SCALES HORIZ SCALE: 1"=5' VERT SCALE: NO SCALE
SHEET
INDEX NUMBER

Sheet Version 2.dft

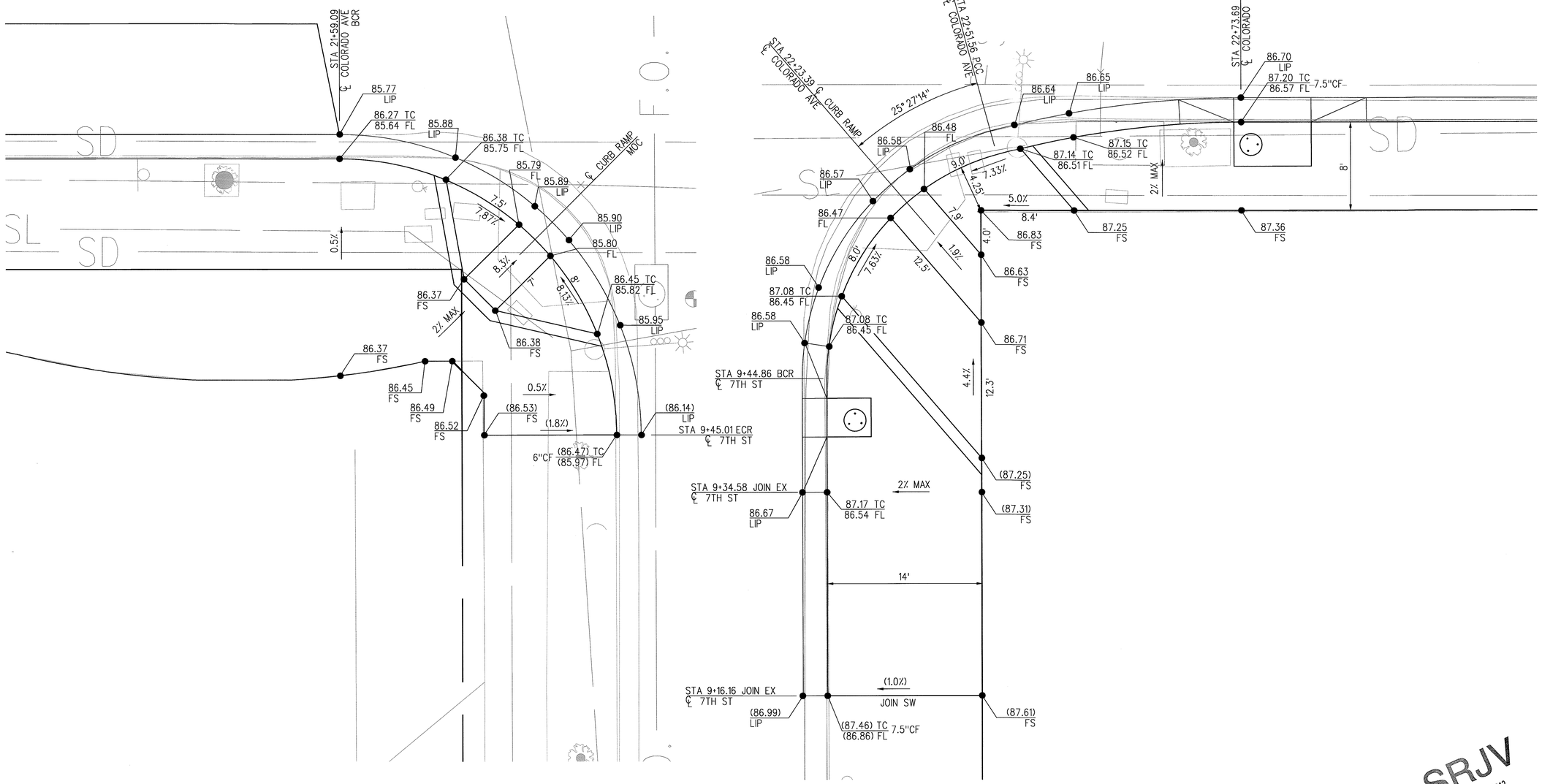

CURB RAMP DETAIL SW CORNER
COLORADO AVE & 7TH ST
PLAN
1"=5'

CURB RAMP DETAIL SE CORNER
COLORADO AVE & 7TH ST
PLAN
1"=5'

SRJV
MAR 29 2013
ISSUED FOR CONSTRUCTION

5' 0 5' 10'

REV	DATE	BY	APP	REG NO	EXPIRES	SEAL HOLDER	DESCRIPTION
0	10/19/12	FH	DJA	C53031	06-30-13	DARREN J. ADRIAN	APPROVED FOR CONSTRUCTION

REVISION DATES (DESIGN STAGE ONLY)

DESIGNED BY A. AZEVEDO
DRAWN BY J. GATZA
CHECKED BY F. HOFFMANN
IN CHARGE D. ADRIAN
DATE 10/19/12

REGISTERED PROFESSIONAL ENGINEER DARREN J. ADRIAN No. C53031 Exp. 06-30-13 CIVIL STATE OF CALIFORNIA

Exposition Metro Line Construction Authority
Expo
EXPO SKANSKA RADOS
444 South Flower Street
Suite 2200
Los Angeles, CA 90071
TEL (213) 443-7463
FAX (213) 362-9481

PARSONS BRINCKERHOFF
Kimley-Horn and Associates, Inc.
9401 SHARI'S PARKWAY, STREET SUITE 1040 LOS ANGELES, CA 90017 TEL: (213) 261-4040

CURRENT STATUS
Exposition Construction Authority Approved for Construction Drawings - AFC
MAR 28 2013

EXPOSITION LRT PROJECT- PHASE 2
STREET IMPROVEMENTS
COLORADO AVENUE & 7TH STREET
PLAN
CURB RAMP DETAILS

CONTRACT NO XP8902-002
DRAWING NO C-3C-309 REV 0
SCALE 1"=5'
SHEET NO 38 OF 108

justin.gatza 9:49:16 PM 10/17/2012
Plot Driver=EXPO2-PDF-Full-BW.plt Pentable=EXPO2-PENTABLE.tbl
K:\LDT_RDWY\094617000 - Expo Ph 2\Working\04 BATCH PLOT\Temp Export Files from PW\Roadway\expo2-c-3c-309.plg

SCALES HORIZ SCALE: 1"=5' VERT SCALE: NO SCALE
SHEET
INDEX NUMBER

Sheet Version 2.01

NO.	DATE	BY	DESCRIPTION	APPROVED
			REVISIONS	

REFERENCE:
SUBMITTED BY: Doug DeVinney
CITY DRAWING NO. 9302
SHEET NO. 38 OF 108
DATE: 3-11 20 13
APPROVED BY: LEON E. SWANN P.E. CITY ENGINEER
ENGINEERING

REVIEWED: DATE: 20
REVIEWED: DATE: 20
REVIEWED: DATE: 3-11 20 13
CITY

City of Santa Monica
Department of Public Works
1437 4th Street, Suite 300 Santa Monica, CA 90401
TEL. (310)458-8721 FAX. (310)393-4425
e-mail : smengineering@smgov.net

Plotted by: justin.gatza 10/17/2012 K:\LDT_RDWY\094617000 - Expo Ph 2\Working\04 BATCH PLOT\Temp Export Files from PW\Roadway\expo2-c-3c-309.plg

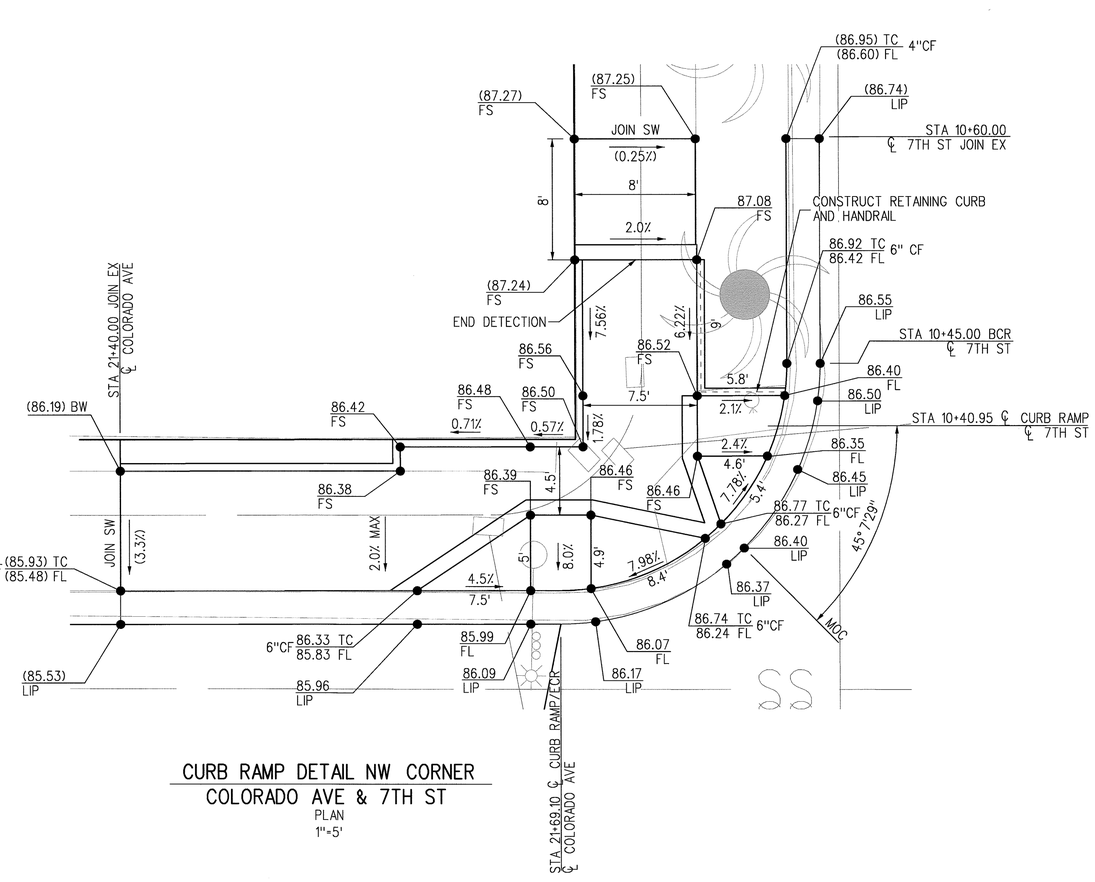

CURB RAMP DETAIL NW CORNER
COLORADO AVE & 7TH ST
PLAN
1"=5'

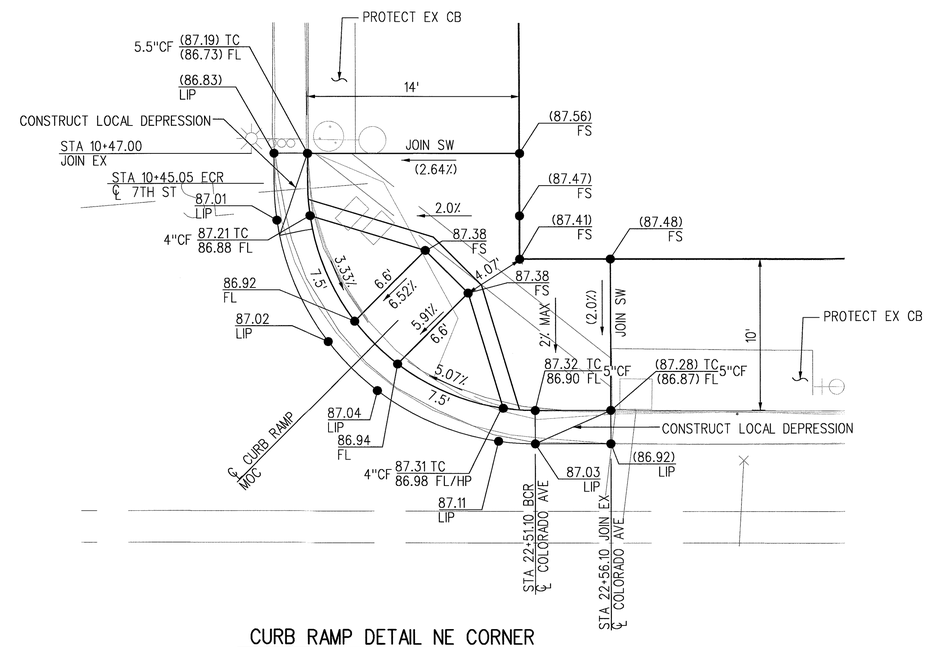

CURB RAMP DETAIL NE CORNER
COLORADO AVE & 7TH ST
PLAN
1"=5'

SRJV
MAR 29 2013
ISSUED FOR CONSTRUCTION

5' 0 5' 10'

NO.	DATE	BY	DESCRIPTION

REVISIONS

REFERENCE :
SUBMITTED BY:
CITY DRAWING NO. 9302
SHEET NO. 39 OF 108
APPROVED BY : LEON H. SWANN P.E. CITY ENGINEER — DATE : 3-11 20 13
ENGINEERING
REVIEWED : DATE : 20
REVIEWED : DATE : 20
REVIEWED : DATE : 3-11 20 13
CITY
APPROVED

City of **Santa Monica**
Department of Public Works
1437 4th Street, Suite 300 Santa Monica, CA 90401
TEL. (310)458-8721 FAX. (310)393-4425
e-mail : smengineering@smgov.net

Plotted by: justin.gatza 10/17/2012 K:\LDT_RDWY\094617000 - Expo Ph 2\Working\04 BATCH PLOT\Temp Export Files from PW\Roadway\expo2-c-3c-310.plg

REV	DATE	BY	APP	REG NO	EXPIRES	SEAL HOLDER	DESCRIPTION
0	10/19/12	FH	DJA	C53031	06-30-13	DARREN J. ADRIAN	APPROVED FOR CONSTRUCTION

REVISION DATES (DESIGN STAGE ONLY)

DESIGNED BY A. AZEVEDO
DRAWN BY J. GATZA
CHECKED BY F. HOFFMANN
IN CHARGE D. ADRIAN
DATE 10/19/12

REGISTERED PROFESSIONAL ENGINEER DARREN J. ADRIAN No. C53031 Exp. 06-30-13 CIVIL STATE OF CALIFORNIA

Exposition Metro Line Construction Authority
Expo
EXPO SKANSKA RADOS
444 South Flower Street
Suite 2200
Los Angeles, CA 90071
TEL (213) 443-7463
FAX (213) 362-9481

PARSONS BRINCKERHOFF
Kimley-Horn and Associates, Inc. 1960 SOUTH FIGUEROA STREET SUITE 1040 LOS ANGELES, CA 90017 TEL: (213) 261-1040
CURRENT STATUS

EXPOSITION LRT PROJECT- PHASE 2
STREET IMPROVEMENTS
COLORADO AVENUE & 7TH STREET
PLAN
CURB RAMP DETAILS

Exposition Construction Authority
Approved for Construction
Drawings - AFC
MAR 28 2013

CONTRACT NO XP8902-002
DRAWING NO C-3C-310 REV 0
SCALE 1"=5'
SHEET NO 39 OF 108

justin.gatza 9:49:18 PM 10/17/2012
Plot Driver=EXPO2-PDF-Full-BW.plt Pentable=EXPO2-PENTABLE.tbl
K:\LDT_RDWY\094617000 - Expo Ph 2\Working\04 BATCH PLOT\Temp Export Files from PW\Roadway\expo2-c-3c-310.plg

SCALES HORIZ SCALE: 1"=5' VERT SCALE: NO SCALE
SHEET
INDEX NUMBER

Sheet Version 2.01

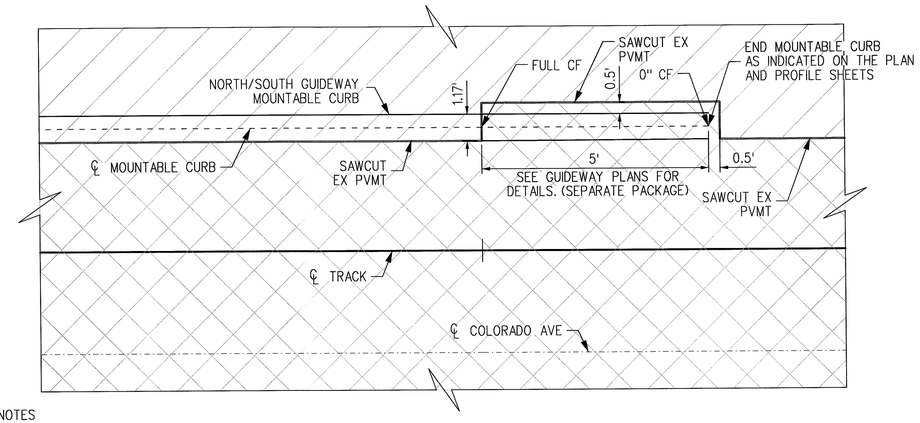

NOTES

1.) SEE STREET IMPROVEMENT PLANS FOR PAVEMENT SECTIONS AND CONSTRUCTION LIMITS

2.) SEE GUIDEWAY PLANS FOR DETAILS ON THE CONSTRUCTION OF THE MOUNTABLE CURB. (SEPARATE PACKAGE)

CONSTRUCTION DETAIL 2
TYPICAL PAVEMENT RECONSTRUCTION WITHIN THE MOUNTABLE CURB TRANSITION
NO SCALE

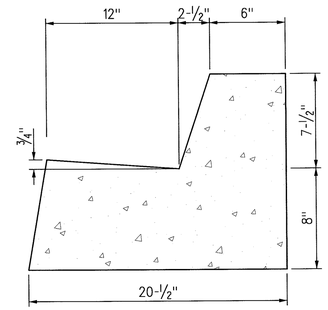

CONSTRUCTION DETAIL 4
MODIFIED CURB AND GUTTER, SM6
NO SCALE

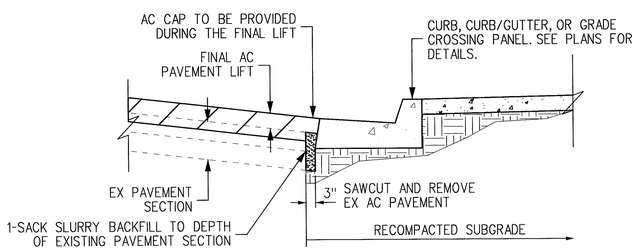

CONSTRUCTION DETAIL 1
TYPICAL PAVEMENT CLOSURE FOR CURB, CURB/GUTTER, AND GRADE-CROSSING PANELS ADJACENT TO EXISTING PAVEMENT.
NO SCALE

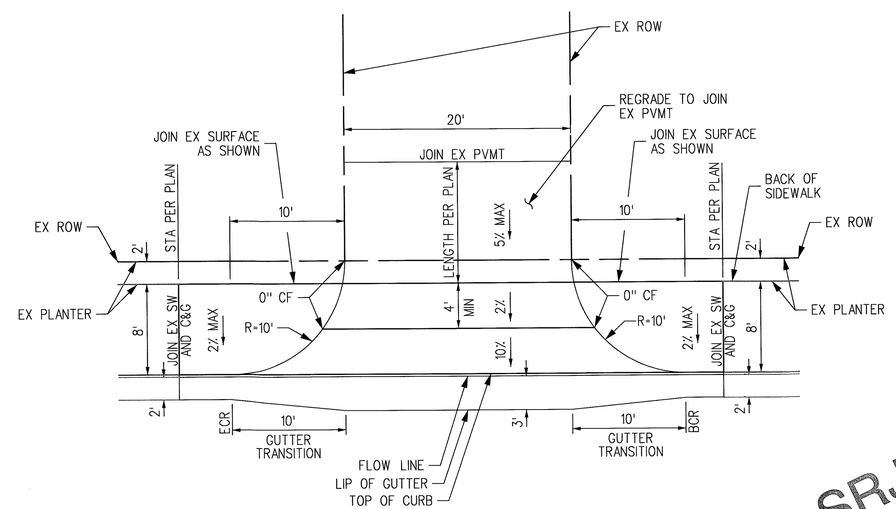

CONSTRUCTION DETAIL 3
MODIFIED PCC ALLEY APPROACH, SM1
NO SCALE

SRJV
MAR 29 2013
ISSUED FOR CONSTRUCTION

REV	DATE	BY	APP	REG NO	EXPIRES	SEAL HOLDER	DESCRIPTION
0	10/19/12	FH	DJA	C53031	06-30-13	DARREN J. ADRIAN	APPROVED FOR CONSTRUCTION

REVISION DATES (DESIGN & PAGE ONLY)

DESIGNED BY J. GATZA
DRAWN BY J. GATZA
CHECKED BY F. HOFFMANN
IN CHARGE D. ADRIAN
DATE 10/19/12

REGISTERED PROFESSIONAL ENGINEER DARREN J. ADRIAN No. C53031 Exp. 06-30-13 CIVIL STATE OF CALIFORNIA

Exposition Metro Line Construction Authority
Expo
EXPO SKANSKA RADOS
444 South Flower Street
Suite 2200
Los Angeles, CA 90071
TEL (213) 443-7463
FAX (213) 362-9481

PARSONS BRINCKERHOFF
Kimley-Horn and Associates, Inc.
CURRENT STATUS

EXPOSITION LRT PROJECT- PHASE 2
STREET IMPROVEMENTS
COLORADO AVENUE
CONSTRUCTION DETAILS
SHEET 1 OF 2

Exposition Construction Authority Approved for Construction Drawings - APC
MAR 28 2013

CONTRACT NO XP8902-002
DRAWING NO CC-3C-301 REV 0
SCALE NO SCALE
SHEET NO 40 OF 108

SCALES: HORIZ SCALE: NO SCALE; VERT SCALE: NO SCALE
SHEET
INDEX NUMBER

justin.gatza 9:49:41 PM 10/17/2012
Plot Driver=EXPO2-PDF-Full-BW.plt
Pentable=EXPO2-PENTABLE.tbl
K:\LDT_RDWY\094617000 - Expo Ph 2\Working\04 BATCH PLOT\Temp Export Files from PW\Roadway\expo2-cc-3c-301.plg

Sheet Version 2.01

NO.	DATE	BY	DESCRIPTION

REVISIONS

REFERENCE:
SUBMITTED BY: Doug DeVinney
CITY DRAWING NO. 9302
SHEET NO.: 40 OF 108
DATE: 3-11 2013
APPROVED BY: LEON E. SWANN, P.E., CITY ENGINEER
ENGINEERING
REVIEWED: DATE: 3-11 2013
CITY

REVIEWED: DATE: 20__
REVIEWED: DATE: 20__
REVIEWED: DATE: 20__

City of Santa Monica
Department of Public Works
1437 4th Street, Suite 300 Santa Monica, CA 90401
TEL. (310)458-8721 FAX. (310)393-4425
e-mail : smengineering@smgov.net

Plotted by: justin.gatza 10/17/2012 K:\LDT_RDWY\094617000 - Expo Ph 2\Working\04 BATCH PLOT\Temp Export Files from PW\Roadway\expo2-cc-3c-301.plg

ECI #00098 - PENDING

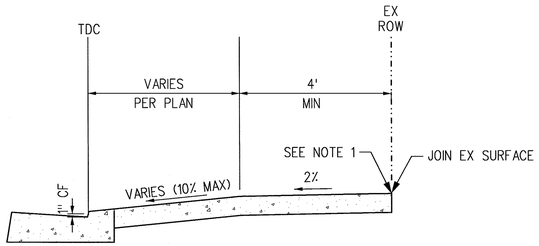

SECTION A-A
NO SCALE

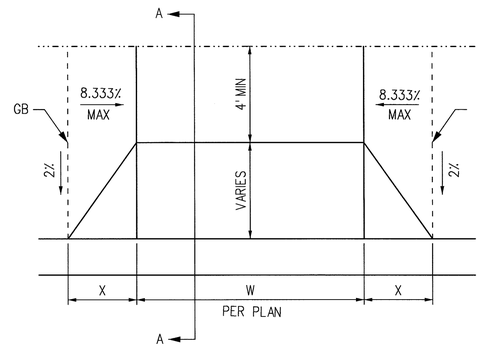

NOTES:

1.) IF PROPOSED DRIVEWAY ABUTS EX PCC PVMT CONSTRUCT P.C.C. CONSTRUCTION JOINT PER CITY OF SANTA MONICA STD. DETAIL SM9.

2.) X=4' UNLESS NOTED OTHERWISE ON THE PLANS

CONSTRUCTION DETAIL 6
MODIFIED DRIVEWAY, SM 5
NO SCALE

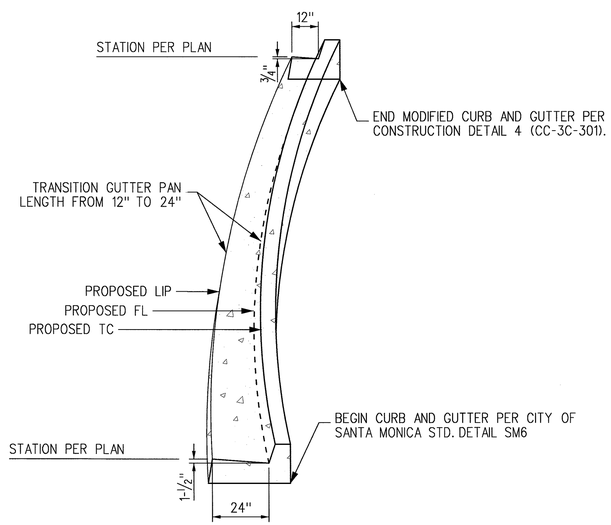

CONSTRUCTION DETAIL 5
CURB AND GUTTER TRANSITION
NO SCALE

SRJV
MAR 29 2013
ISSUED FOR CONSTRUCTION

REV	DATE	BY	APP	REG NO	EXPIRES	SEAL HOLDER	DESCRIPTION
0	10/19/12	FH	DJA	C53031	06-30-13	DARREN J. ADRIAN	APPROVED FOR CONSTRUCTION

DESIGNED BY J. GATZA
DRAWN BY J. GATZA
CHECKED BY F. HOFFMANN
IN CHARGE D. ADRIAN
DATE 10/19/12

REGISTERED PROFESSIONAL ENGINEER
DARREN J. ADRIAN
No. C53031
Exp. 06-30-13
CIVIL
STATE OF CALIFORNIA

Exposition Metro Line Construction Authority
Expo

EXPO SKANSKA RADOS
444 South Flower Street
Suite 2200
Los Angeles, CA 90071
TEL (213) 443-7463
FAX (213) 362-9481

PARSONS BRINCKERHOFF
CURRENT STATUS
Kimley-Horn and Associates, Inc.
440 SOUTH FIGUEROA STREET
SUITE 1040
LOS ANGELES, CA 90017
TEL: (213) 261-4040

Exposition Construction Authority
Approved for Construction
Drawings - AFC
MAR 28 2013

EXPOSITION LRT PROJECT- PHASE 2
STREET IMPROVEMENTS
COLORADO AVENUE
CONSTRUCTION DETAILS
SHEET 2 OF 2

CONTRACT NO XP8902-002
DRAWING NO CC-3C-302 REV 0
SCALE NO SCALE
SHEET NO 41 OF 108

REVISION DATES (DESIGN STAGE ONLY)

justin.gatza 9:49:42 PM 10/17/2012
Plot Driver=EXPO2-PDF-Full-BW.plt Pentable=EXPO2-PENTABLE.tbl

K:\LDT_RDWY\094617000 - Expo Ph 2\Working\04 BATCH PLOT\Temp Export Files from PW\Roadway\expo2-cc-3c-302.plg

SCALES HORIZ SCALE: NO SCALE VERT SCALE: NO SCALE

SHEET

INDEX NUMBER

REFERENCE:
SUBMITTED BY: Doug DeVinnie
CITY DRAWING NO. 9302
SHEET NO.: 41 OF 108
APPROVED BY: LEON E. SWAIN, P.E., CITY ENGINEER
DATE: 3-11 2013
ENGINEERING

REVIEWED: DATE: 20
REVIEWED: DATE: 20
REVIEWED: DATE: 3-11 2013
CITY

NO.	DATE	BY	DESCRIPTION	APPROVED
			REVISIONS	

City of Santa Monica
Department of Public Works
1437 4th Street, Suite 300 Santa Monica, CA 90401
TEL. (310)458-8721 FAX. (310)393-4425
e-mail : smengineering@smgov.net

Plotted by: justin.gatza 10/17/2012 K:\LDT_RDWY\094617000 - Expo Ph 2\Working\04 BATCH PLOT\Temp Export Files from PW\Roadway\expo2-cc-3c-302.plg

Sheet Version 2.01

CONCRETE UNIT PAVER DETAILS ARE AS SHOWN ON THE CITY OF SANTA MONICA COLORADO ESPLANADE PROJECT PLANS, AND AS DIRECTED BY THE CITY OF SANTA MONICA AND ARE THE RESPONSIBILITY OF THE CITY OF SANTA MONICA.

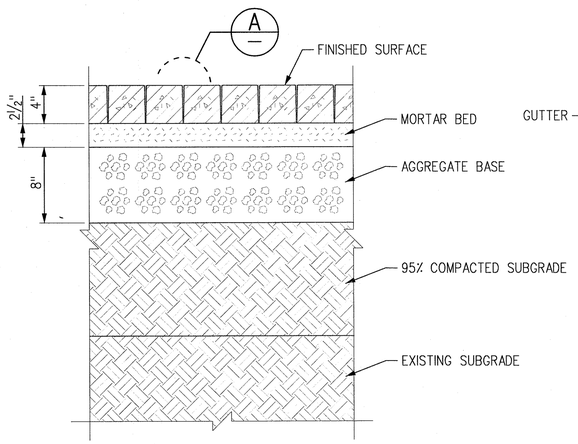

CONSTRUCTION DETAIL B
UNIT PAVING - PEDESTRIAN
SAND SET ON AGGREGATE BASE

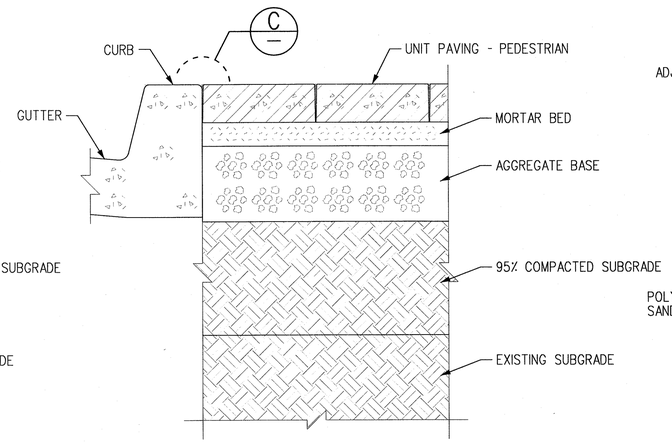

CONSTRUCTION DETAIL D
UNIT PAVING - PEDESTRIAN
SAND SET ON AGGREGATE BASE AT CURB

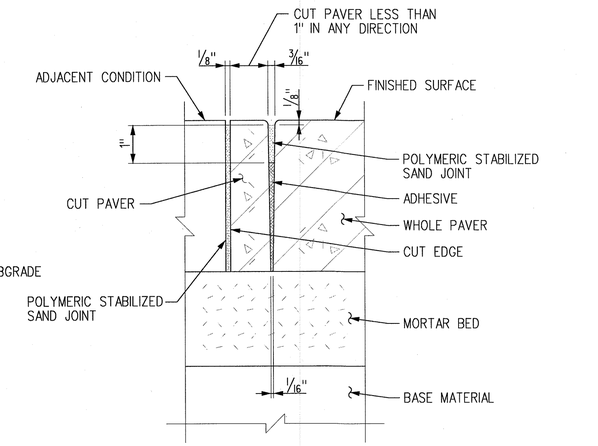

NOTE:
PAVER SPACERS NOT SHOWN FOR CLARITY

CONSTRUCTION DETAIL F
ADHESIVE JOINT AT CUT UNIT PAVER

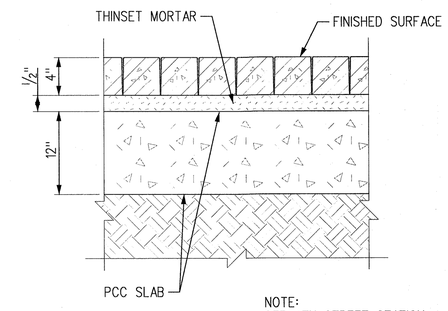

NOTE:
SEE 4TH STREET STATION PLANS FOR TICKETING AREA LAYOUT (SEPARATE PACKAGE)

CONSTRUCTION DETAIL H
PAVER SECTION OVER PCC SLAB IN TICKETING AREA #3 (AREA AS DEFINED BY A-S7-128 AND A-S7-129)

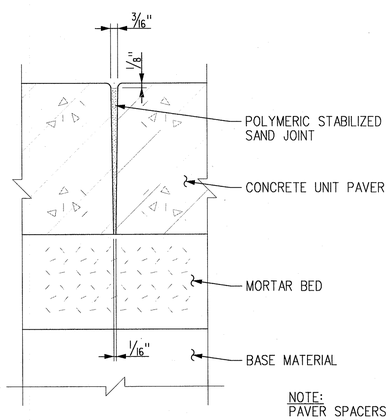

NOTE:
PAVER SPACERS NOT SHOWN FOR CLARITY.

CONSTRUCTION DETAIL A
POLYMERIC STABILIZED SAND JOINT

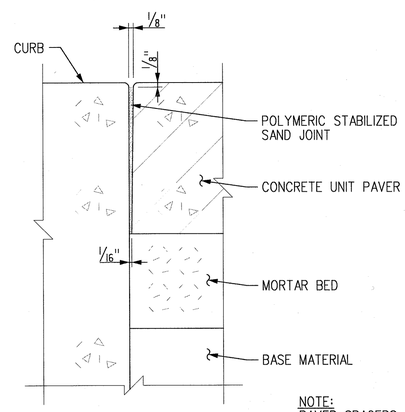

NOTE:
PAVER SPACERS NOT SHOWN FOR CLARITY

CONSTRUCTION DETAIL C
POLYMERIC STABILIZED SAND JOINT AT CURB

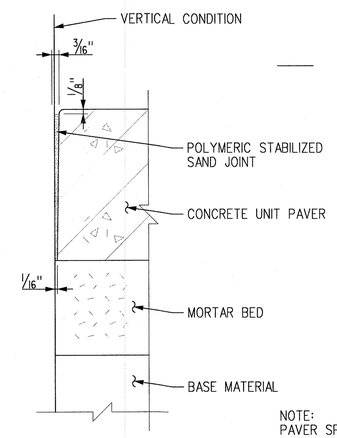

NOTE:
PAVER SPACERS NOT SHOWN FOR CLARITY

CONSTRUCTION DETAIL E
POLYMERIC STABILIZED SAND JOINT AT VERTICAL CONDITION

SRJV
OCT 01 2014
ISSUED FOR CONSTRUCTION

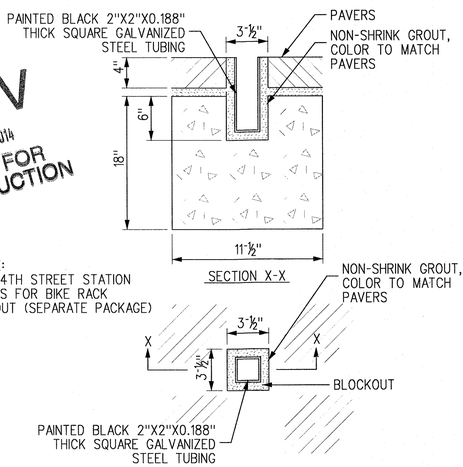

NOTE:
SEE 4TH STREET STATION PLANS FOR BIKE RACK LAYOUT (SEPARATE PACKAGE)

CONSTRUCTION DETAIL G
BIKE RACK EMBEDMENT DETAIL

Exposition Construction Authority
Approved for Construction
Drawings - AFC
SEP 30 2014

REV	DATE	BY	APP	REG NO	EXPIRES	SEAL HOLDER	DESCRIPTION
0	7/16/14	FH	DJA	C53031	06-30-15	DARREN J. ADRIAN	ECI98

REVISION DATES (DESIGN STAGE ONLY)

DESIGNED BY J. GATZA
DRAWN BY J. GATZA
CHECKED BY F. HOFFMANN
IN CHARGE D. ADRIAN
DATE 6/19/14

REGISTERED PROFESSIONAL ENGINEER
DARREN J. ADRIAN
No. C53031
Exp. 06-30-15
CIVIL
STATE OF CALIFORNIA

Exposition Metro Line Construction Authority
Expo
EXPO SKANSKA RADOS
444 South Flower Street
Suite 2200
Los Angeles, CA 90071
TEL (213) 443-7463
FAX (213) 362-9481

PARSONS BRINCKERHOFF
Kimley-Horn and Associates, Inc.
801 SOUTH FIGUEROA STREET SUITE 1040 LOS ANGELES, CA 90017 TEL: (213) 261-4040

CURRENT STATUS

EXPOSITION LRT PROJECT- PHASE 2
STREET IMPROVEMENTS
COLORADO AVENUE
CONSTRUCTION DETAILS
CSM PAVERS

CONTRACT NO XP8902-002
DRAWING NO CC-3C-303
REV 0
SCALE NO SCALE
SHEET NO OF

SCALES: HORIZ SCALE: NO SCALE; VERT SCALE: NO SCALE
SHEET
INDEX NUMBER

justin.gatza 11:52:46 AM 7/17/2014
Plot Driver=EXPO2-PDF-Full-BW.plt
Pentable=EXPO2-PENTABLE.tbl
c:\projectwise\dms11375\expo2-cc-3c-303.plg

Sheet Version 2.01

NO.	DATE	BY	DESCRIPTION	APPROVED
			REVISIONS	

REFERENCE:
SUBMITTED BY:
CITY DRAWING NO. 9302
SHEET NO.: OF
APPROVED BY: LEON E. SWAIN, P.E., CITY ENGINEER, ENGINEERING
DATE: 9-29 20 14
REVIEWED: DATE: 20
REVIEWED: DATE: 20
REVIEWED: DATE: 9-29 20 14 CITY

City of Santa Monica
Department of Public Works
1437 4th Street, Suite 300 Santa Monica, CA 90401
TEL. (310)458-8721 FAX. (310)393-4425
e-mail : smengineering@smgov.net

Plotted by: justin.gatza 7/17/2014 c:\projectwise\dms11375\expo2-cc-3c-303.plg

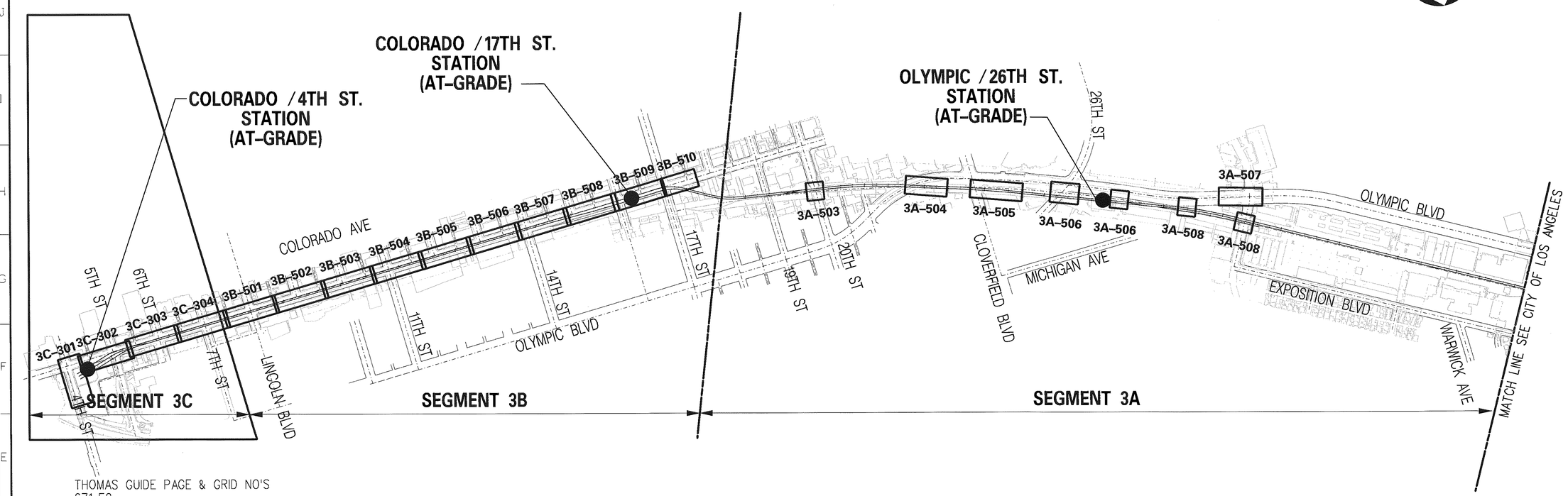

THOMAS GUIDE PAGE & GRID NO'S
671-E2

SRJV
JAN 10 2013
ISSUED FOR CONSTRUCTION

Exposition Construction Authority
Approved for Construction
Drawings - AFC
JAN 10 2013

REV	DATE	BY	APP	REG NO	EXPIRES	SEAL HOLDER	DESCRIPTION
0	12/14/12	NM	RCW	C78128	9/30/13	ROBERT C. WELCH	APPROVED FOR CONSTRUCTION

REVISION DATES (DESIGN STAGE ONLY)

DESIGNED BY N. MELTON
DRAWN BY L. SANCHEZ
CHECKED BY J. SCHICK
IN CHARGE R. WELCH
DATE 12/14/12

REGISTERED PROFESSIONAL ENGINEER
ROBERT C. WELCH
No. C78128
Exp. 09-30-13
CIVIL
STATE OF CALIFORNIA

Exposition Metro Line Construction Authority
Expo

EXPO SKANSKA RADOS
444 South Flower Street
Suite 2200
Los Angeles, CA 90071
TEL (213) 443-7463
FAX (213) 362-9481

PARSONS BRINCKERHOFF

CURRENT STATUS

EXPOSITION LRT PROJECT- PHASE 2
STORM DRAIN
SEGMENT 3C
KEY MAP

CONTRACT NO XP8902-002
DRAWING NO SDK-3C-301 REV 0
SCALE NO SCALE
SHEET NO 42 OF 108

SCALES HORIZ SCALE: VERT SCALE:
SHEET
INDEX NUMBER

hernandezh 10:42:51 AM 1/7/2013
Plot Driver=EXPO2-PDF-Full-BW.plt Pentable=EXPO2-PENTABLE.TBL
C:\Users\hernandezh\Desktop\3c-301 drainage\expo2-sdk-3C-301.plg

Sheet Version 2.dll

CITY DRAWING NO. U9210
SHEET NO. 42 OF 108
DATE 1-09-2013
SUBMITTED BY:
APPROVED BY: LEONE E. SWANN, P.E., CITY ENGINEER
ENGINEERING

REFERENCE :
REVIEWED : DATE : 20
REVIEWED : DATE : 20
REVIEWED : DATE 1-09-2013
CITY

NO.	DATE	BY	DESCRIPTION
			REVISIONS

APPROVED

City of Santa Monica
Department of Public Works
1437 4th Street, Suite 300 Santa Monica, CA 90401
TEL. (310)458-8721 FAX. (310)393-4425
e-mail : smengineering@smgov.net

Plotted by: hernandezh 1/7/2013 C:\Users\hernandezh\Desktop\3c-301 drainage\expo2-sdk-3C-301.plg

CONSTRUCTION SYMBOLS

- CONSTRUCT
- EXISTING
- REMOVE
- REMOVE AND RECONSTRUCT
- REMODEL EXISTING
- WORK BY OTHERS

CONSTRUCTION NOTES

NO.	DESCRIPTION	DIMENSION (IF APPLICABLE)	STANDARD PLAN (IF APPLICABLE) CITY OF SANTA MONICA	COUNTY OF LA	SPECIAL DETAILS
1	CURB OPENING CATCH BASIN	V, W, H, A	SPPWC 300-3	SPPWC 300-3	
2	MANHOLE PIPE TO PIPE (LESS THAN 33")	M, H, A	SPPWC 321-2	SPPWC 321-2	
3	18" INLINE DRAIN (SEE GUIDEWAY PACKAGE)				CDD-002
4	JUNCTION STRUCTURE - PIPE TO PIPE INLET (ID < 24")	CASE, A	SPPWC 332-2	SPPWC 332-2	
5	MONOLITHIC CATCH BASIN CONNECTION	A, FOR B<12" USE 12" APPLICATION	SPPWC 308-2	SPPWC 308-2	
6	TRANSITION STRUCTURE - PIPE TO PIPE	A, B, C, D1, D2	SPPWC 340-2	SPPWC 340-2	
7	LOCAL DEPRESSION AT CATCH BASIN, K=5.0' (UNLESS OTHERWISE NOTED)	H	SPPWC 313-3	SPPWC 313-2	
8	REINFORCED CONCRETE PIPE (RCP)	DIAMETER, D-LOAD			
9	PIPES LAYING IN TRENCHES	BEDDING CASE		S-3083-3	
10	REINFORCED CONCRETE BOX (RCB)	S, L, H	SPPWC 390-0	SPPWC 390-0	
11	CATCH BASIN IN DITCH (TYPE PROVIDED IN PROFILE)	H			CALTRANS D73
12	CLEANOUT (SEE GUIDEWAY PACKAGE)				CDD-002
13	CONCRETE COLLAR		SPPWC 380-4	SPPWC 380-4	
14	JUNCTION STRUCTURE PIPE TO PIPE (INLET ID > 24" OR OD > 1/2 MAIN LINE ID)	A, B, C, D, ELEV R, ELEV S	SPPWC 331-3	SPPWC 331-3	
15	JUNCTION STRUCTURE - PIPE TO RCB	A, B, C, ELEV R, ELEV S	SPPWC 333-2	SPPWC 333-2	
17	MAINTENANCE HOLE - PIPE TO PIPE (LARGE SIDE INLET)	A, B, C, D1, D2, ELEV R, ELEV S	SPPWC 322-2	SPPWC 322-2	
18	PERFORATED PIPE, SCH-40	SCHEDULE			
19	HDPE, SDR-21 OR APPROVED EQUAL 1	SCHEDULE			
20	~~BLANKET PROTECTION FOR PIPES~~		SPPWC 225-2		
21	PLASTIC PIPE W/ 4'-15' COVER 2			S-2022 2	
22	~~NOT USED~~				
23	SLOTTED DRAIN (SEE GUIDEWAY PACKAGE)				CDD-003
24	PVC, SCH-40 (UNLESS OTHERWISE NOTED)	SCHEDULE			
25	NOT USED				
26	TRACK DRAIN (SEE SEGMENT 3B PACKAGE)				CDD-006
27	GRATING CATCH BASIN - ALLEY (TRANSVERSE)	NO. OF GRATES, A, V, Vi, H	SPPWC 305-3	SPPWC 305-3	
28	L SHAPE CONNECTION (SEE GUIDEWAY PACKAGE)				CDD-007
29	PIPE CONNECTION TO EXISTING STORM DRAINS, CASE 3		SPPWC 335-2	SPPWC 335-2	
30	ABANDONMENT SEALS		SPPWC 381-2	SPPWC 381-2	
31	REMODEL CATCH BASIN (SEE SEGMENT 3B PACKAGE)				CDD-009
32	CORRUGATED METAL PIPE (CMP)	D			
33	CURB OPENING CATCH BASIN WITH GRATINGS	NO. OF GRATES, A, V, Vi, H	SPPWC 302-3	SPPWC 302-3	
34	NOT USED				
35	NOT USED				
36	PLASTIC PIPE LESS THAN 4' COVER (SEE GUIDEWAY PACKAGE)			S-2023-2 (CASE IV)	
37	STORM DRAIN ENCASEMENT DETAIL (SEE GUIDEWAY PACKAGE)				CDD-002
38	THRUST RESTRAINT (SEE SEGMENT 3B PACKAGE)				CDD-004
39	WALL ANCHOR			PER MANUFACTURER SPECS	
40	BRICK ARCH				
41	MODIFICATION FOR SIDE OPENING CATCH BASIN	V, W, H, A	SPPWC 314-3	SPPWC 314-3	
42	CURBSIDE GRATING CATCH BASIN (SEE SEGMENT 3B PACKAGE)	NO. OF GRATES, A, V, W			CDD-011 & CDD-012

ABBREVIATIONS

&	AND
@	AT
°	DEGREE
ABND	ABANDONED
AC	ASPHALT CONCRETE
APPROX	APPROXIMATE
AVE	AVENUE
BLVD	BOULEVARD
℄	CENTERLINE
CB	CATCH BASIN
CFS	CUBIC FEET PER SECOND
CIP	CAST IN PLACE
CMB	CRUSHED MISCELLANEOUS BASE
CMP	CORRUGATED METAL PIPE
CO	CLEANOUT
CSM	CITY OF SANTA MONICA
C/S	COMMUNICATION/ SYSTEMS
DR	DRIVE
DWG	DRAWING
ELEC	ELECTRICAL
ELEV	ELEVATION
EX	EXISTING
FO	FIBER OPTICS
G	GAS
H	HEIGHT
HDPE	HIGH DENSITY POLYETHYLENE
HGL	HYDRAULIC GRADE LINE
HP	HIGH POINT
ILD	INLINE DRAIN
INV	INVERT
L	LENGHT, LEFT
LACFCD	LOS ANGELES COUNTY FLOOD CONTROL DISTRICT
LT	LEFT
MH	MANHOLE, MAINTENANCE HOLE
MIN	MINIMUM
MSE	MECHANICALLY STABILIZED EARTH
NIC	NOT IN CONTRACT
NO. OR #	NUMBER
OCS	OVERHEAD CONTACT SYSTEM
OH	OVERHEAD
PROP	PROPOSED
PVC	POLYVINYL CHLORIDE
Q	RATE OF FLOW IN CUBIC FEET PER SECOND
R	RIGHT, RADIUS
RCB	REINFORCED CONCRETE BOX
RCP	REINFORCED CONCRETE PIPE
RT	RIGHT
RW	RETAINING WALL, RECLAIMED WATER
R/W	RIGHT-OF-WAY
S	SLOPE
SCHED	SCHEDULE
SD	STORM DRAIN
SLD	SLOTTED DRAIN
SHT.	SHEET
SPEC	SPECIFICATIONS
SPPWC	STANDARD PLANS FOR PUBLIC WORKS CONSTRUCTION
SS	SANITARY SEWER
ST	STREET
STA	STATION
STL	STEEL
SUSMP	STANDARD URBAN STORMWATER MITIGATION PLAN
SYS	SYSTEM
TEL	TELEPHONE
TPSS	TRACTION POWER SUBSTATION
TRKD	TRACK DRAIN
TV	TELEVISION
TYP	TYPICAL
UD	UNDERDRAIN
UNK	UNKNOWN
W	WATER, WIDTH
WD	WALL DRAIN

SRJV
FEB 27 2014
ISSUED FOR CONSTRUCTION

REV	DATE	BY	APP	REG NO	EXPIRES	SEAL HOLDER	DESCRIPTION
2	12/9/13	NM	RCW	C78128	9/30/15	ROBERT C. WELCH	ECI41
1	2/28/13	NM	RCW	C78128	9/30/13	ROBERT C. WELCH	ECI03
0	10/19/12	NM	RCW	C78128	9/30/13	ROBERT C. WELCH	APPROVED FOR CONSTRUCTION

DESIGNED BY N. MELTON
DRAWN BY N. MELTON
CHECKED BY J. SCHICK
IN CHARGE R. WELCH
DATE 2/28/13

REGISTERED PROFESSIONAL ENGINEER ROBERT C. WELCH No. C78128 Exp. 09-30-15 CIVIL STATE OF CALIFORNIA

Exposition Metro Line Construction Authority
Expo
EXPO SKANSKA RADOS
444 South Flower Street
Suite 2200
Los Angeles, CA 90071
TEL (213) 443-7463
FAX (213) 362-9481

PARSONS BRINCKERHOFF

CURRENT STATUS

EXPOSITION LRT PROJECT- PHASE 2
GRADING & DRAINAGE
CONSTRUCTION NOTES

Exposition Construction Authority
Approved for Construction
Drawings - AFC
FEB 26 2014

CONTRACT NO XP8902-002
DRAWING NO CGG-301
REV 2
SCALE NO SCALE
SHEET NO 43 OF 108

SCALES HORIZ SCALE: VERT SCALE:
SHEET
INDEX NUMBER

HernandezH 3:10:38 PM 12/9/2013
Plot Driver=EXPO2-Full-BW-pdf.plt
Pentable=EXPO2-PENTABLE.tbl
C:\Users\hernandezh\Desktop\WELCH9-2\expo2-CGG-301.plg

REVISION DATES (DESIGN STAGE ONLY)

CITY DRAWING NO. U9210
SHEET NO. 43 OF 108
DATE: 2-19 2014
APPROVED BY: KEON E. SWAIN, P.E., CITY ENGINEER
ENGINEERING

REFERENCE:
SUBMITTED BY:
DATE: 2-19 2014
REVIEWED:
DATE: 2-19 2014
REVIEWED:
DATE: 20
REVIEWED:

NO. DATE BY DESCRIPTION
REVISIONS

APPROVED
CITY

City of Santa Monica
Department of Public Works
1437 4th Street, Suite 300 Santa Monica, CA 90401
TEL. (310)458-8721 FAX. (310)393-4425
e-mail : smengineering@smgov.net

Plotted by: HernandezH 12/9/2013 C:\Users\hernandezh\Desktop\WELCH9-2\expo2-CGG-301.plg

Sheet Version 2.01

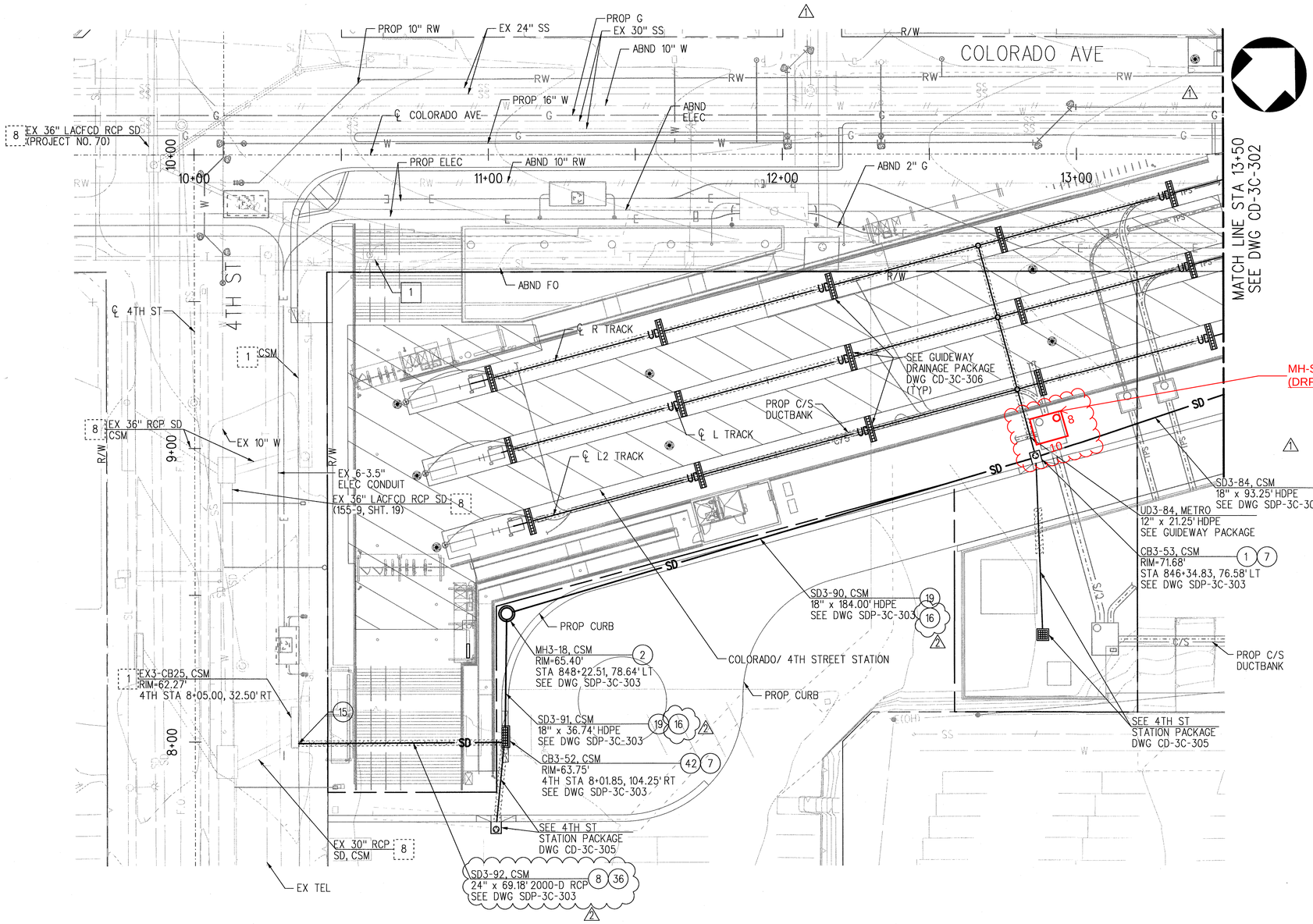

CONSTRUCTION NOTES

CONSTRUCT — REMODEL EXISTING
EXISTING — REMOVE AND CONSTRUCT
REMOVE — WORK BY OTHERS

NOTES:

1. FOR CONSTRUCTION NOTES SEE DWG CGG-101.
2. SEE UTILITY PLANS (UR) FOR EXISTING UTILITIES. UR-3C-301
3. SEE STREET IMPROVEMENT PLANS (CA) FOR PROPOSED CONSTRUCTION OF ROADWAY IMPROVEMENTS AND VERIFICATION OF RIM ELEVATIONS.
4. SEE STREET LIGHTING PLANS (SL) FOR EXACT LOCATIONS AND DETAILS.
5. SEE TRAFFIC SIGNAL PLANS (TR) FOR TRAFFIC SIGNAL POLE AND EQUIPMENT LOCATIONS AND DETAILS.
6. SEE SIGNING AND STRIPING PLANS (SS) FOR SIGNING AND STRIPING LOCATIONS AND DETAILS.
7. SEE TRACKWORK PLANS (T) FOR TRACK RELATED WORK.
8. SEE RIGHT-OF-WAY PLANS FOR RIGHT-OF-WAY TAKE AND TEMPORARY CONSTRUCTION EASEMENTS.
9. SEE DUCTBANK PLANS (NX) FOR EXACT LOCATIONS AND DETAILS.
10. SEE GUIDEWAY PLANS (GC) FOR FENCE REQUIREMENTS IN METRO R/W.
11. SEE GRADE CROSSING PLANS (GX) FOR GRADE CROSSING EQUIPMENT LOCATIONS AND DETAILS.
12. SEE FIBER OPTIC PLANS (NA) FOR EXACT LOCATION OF CSM FIBER OPTIC INTERCONNECT.
13. CONTRACTOR TO VERIFY EXISTING UTILITY LOCATIONS AND DEPTH.
14. ALL NEW AND REMOVED/REPLACED CATCH BASINS UNDER THIS PROJECT SHALL INCLUDE CATCH BASIN FILTER INSERTS AND CATCH BASIN OPENING SCREENS. REUSE EXISTING INSERTS AND SCREENS WHEN APPLICABLE.
15. ALL NEW AND REMOVED/REPLACED CATCH BASINS UNDER THIS PROJECT SHALL BE STENCILED WITH PROHIBITIVE LANGUAGE, "NO DUMPING - DRAINS TO OCEAN".
16. OBTAIN LACFCD PERMIT PRIOR TO TIE IN TO ALL LACFCD FACILITIES.
17. SEE TRACTION POWER SYSTEMS PLANS (P) FOR GRADING DETAILS FOR TPSS & RADIO SITES.
18. STATIONING OFF R TRACK UNLESS OTHERWISE NOTED.
19. THOMAS GUIDE PAGE AND GRID NO. 671-E2.

SRJV
MAR 04 2014
ISSUED FOR CONSTRUCTION

20' 0 20' 40'
HORIZ:1"=20'

CITY DRAWING NO. U9210
SHEET NO. 44 OF 108
APPROVED BY: LEON E. SWAIN, P.E., CITY ENGINEER — DATE: 2-19 2014
REFERENCE:
SUBMITTED BY:
REVIEWED: DATE: 20
REVIEWED: DATE: 2-19 2014
REVIEWED: DATE: 2-19 2014
CITY ENGINEERING

NO.	DATE	BY	DESCRIPTION	APPROVED

REVISIONS

City of Santa Monica
Department of Public Works
1437 4th Street, Suite 300 Santa Monica, CA 90401
TEL. (310)458-8721 FAX. (310)393-4425
e-mail : smengineering@smgov.net

Plotted by: HernandezH 12/9/2013 C:\Users\hernandezh\Desktop\WELCH9-2\expo2-cd-3C-301.plg

REV	DATE	BY	APP	REG NO	EXPIRES	SEAL HOLDER	DESCRIPTION
2	12/9/13	NM	RCW	C78128	9/30/15	ROBERT C. WELCH	ECI41
1	3/8/13	NM	RCW	C78128	9/30/13	ROBERT C. WELCH	ECI03
0	12/14/12	NM	RCW	C78128	9/30/13	ROBERT C. WELCH	APPROVED FOR CONSTRUCTION

DESIGNED BY N. MELTON
DRAWN BY N. MELTON
CHECKED BY J. SCHICK
IN CHARGE R. WELCH
DATE 3/8/13

REGISTERED PROFESSIONAL ENGINEER — ROBERT C. WELCH — No. C78128 — Exp. 09-30-15 — CIVIL — STATE OF CALIFORNIA

Exposition Metro Line Construction Authority
Expo
EXPO SKANSKA RADOS
444 South Flower Street Suite 2200 Los Angeles, CA 90071
TEL (213) 443-7463 FAX (213) 362-9481
PARSONS BRINCKERHOFF
CURRENT STATUS
Exposition Construction Authority Approved for Construction Drawings - AFC MAR 04 2014

EXPOSITION LRT PROJECT- PHASE 2
STORM DRAIN SEGMENT 3C
COLORADO AVE / 4TH ST
PLAN
STA 10+00 TO 13+50

CONTRACT NO XP8902-002
DRAWING NO CD-3C-301 REV 2
SCALE HOR: 1"=20' VERT: 1"=4'
SHEET NO 44 OF 108

HernandezH 3:10:30 PM 12/9/2013
Plot Driver=EXPO2-Full-BW-pdf.plt Pentable=EXPO2-PENTABLE.tbl
C:\Users\hernandezh\Desktop\WELCH9-2\expo2-cd-3C-301.plg
SCALES HORIZ SCALE: 1"=20' VERT SCALE: 1"=4'
SHEET INDEX NUMBER

REVISION DATES (DESIGN STAGE ONLY)

Sheet Version 2.01

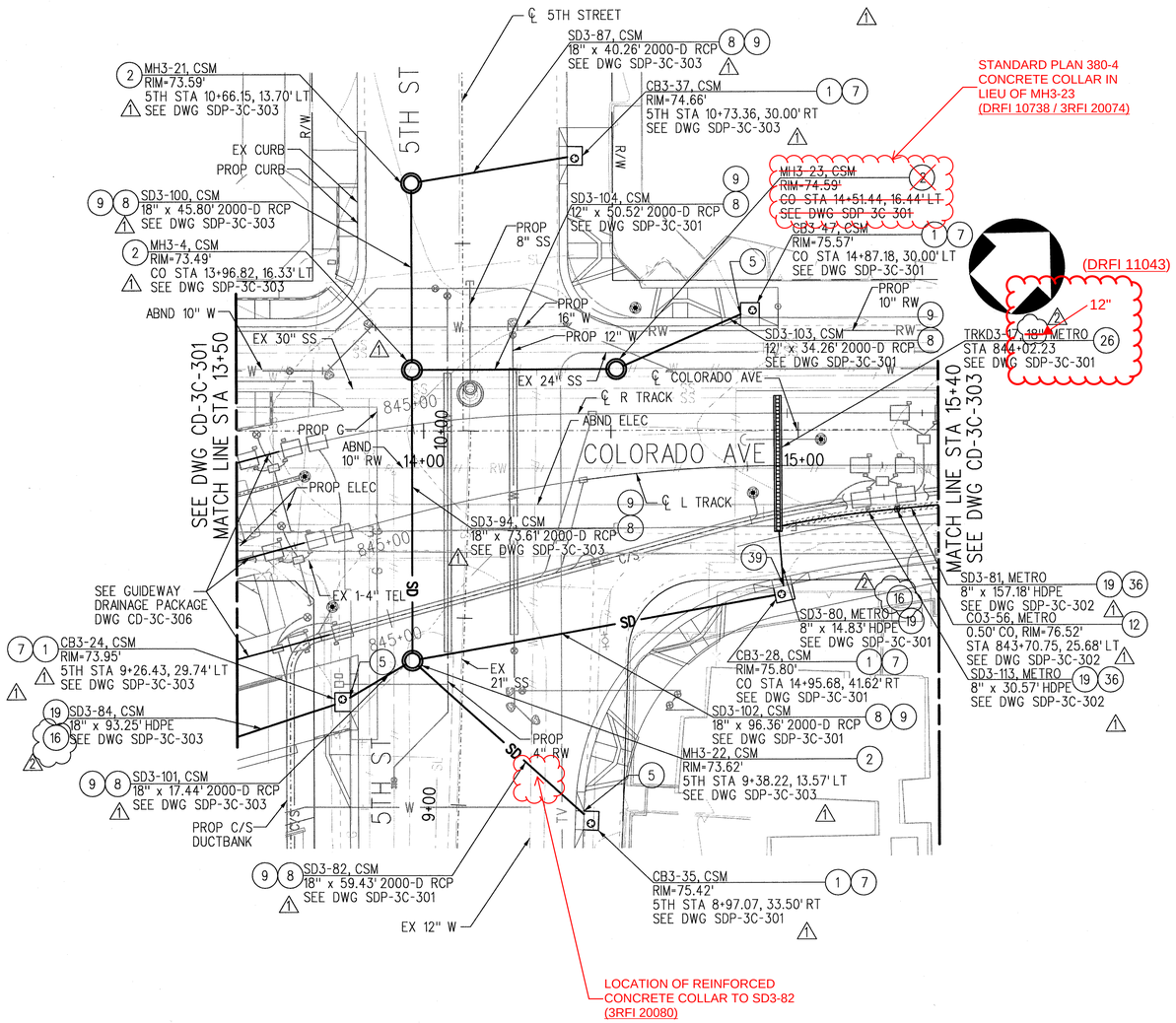

CONSTRUCTION NOTES

CONSTRUCT — REMODEL EXISTING
EXISTING — REMOVE AND CONSTRUCT
REMOVE — WORK BY OTHERS

NOTES:

1. FOR CONSTRUCTION NOTES SEE DWG CGG-101.
2. SEE UTILITY PLANS (UR) FOR EXISTING UTILITIES. UR-3C-302
3. SEE STREET IMPROVEMENT PLANS (CA) FOR PROPOSED CONSTRUCTION OF ROADWAY IMPROVEMENTS AND VERIFICATION OF RIM ELEVATIONS.
4. SEE STREET LIGHTING PLANS (SL) FOR EXACT LOCATIONS AND DETAILS.
5. SEE TRAFFIC SIGNAL PLANS (TR) FOR TRAFFIC SIGNAL POLE AND EQUIPMENT LOCATIONS AND DETAILS.
6. SEE SIGNING AND STRIPING PLANS (SS) FOR SIGNING AND STRIPING LOCATIONS AND DETAILS.
7. SEE TRACKWORK PLANS (T) FOR TRACK RELATED WORK.
8. SEE RIGHT-OF-WAY PLANS FOR RIGHT-OF-WAY TAKE AND TEMPORARY CONSTRUCTION EASEMENTS.
9. SEE DUCTBANK PLANS (NX) FOR EXACT LOCATIONS AND DETAILS.
10. SEE GUIDEWAY PLANS (GC) FOR FENCE REQUIREMENTS IN METRO R/W.
11. SEE GRADE CROSSING PLANS (GX) FOR GRADE CROSSING EQUIPMENT LOCATIONS AND DETAILS.
12. SEE FIBER OPTIC PLANS (NA) FOR EXACT LOCATION OF CSM FIBER OPTIC INTERCONNECT.
13. CONTRACTOR TO VERIFY EXISTING UTILITY LOCATIONS AND DEPTH.
14. ALL NEW AND REMOVED/REPLACED CATCH BASINS UNDER THIS PROJECT SHALL INCLUDE CATCH BASIN FILTER INSERTS AND CATCH BASIN OPENING SCREENS. REUSE EXISTING INSERTS AND SCREENS WHEN APPLICABLE.
15. ALL NEW AND REMOVED/REPLACED CATCH BASINS UNDER THIS PROJECT SHALL BE STENCILED WITH PROHIBITIVE LANGUAGE, "NO DUMPING - DRAINS TO OCEAN".
16. OBTAIN LACFCD PERMIT PRIOR TO TIE IN TO ALL LACFCD FACILITIES.
17. SEE TRACTION POWER SYSTEMS PLANS (P) FOR GRADING DETAILS FOR TPSS & RADIO SITES.
18. STATIONING OFF R TRACK UNLESS OTHERWISE NOTED.

SRJV
FEB 27 2014
ISSUED FOR CONSTRUCTION

20' 0 20' 40'
HORIZ:1"=20'

REV	DATE	BY	APP	REG NO	EXPIRES	SEAL HOLDER	DESCRIPTION
2	12/9/13	NM	RCW	C78128	9/30/15	ROBERT C. WELCH	EC141
1	3/8/13	NM	RCW	C78128	9/30/13	ROBERT C. WELCH	EC103
0	12/14/12	NM	RCW	C78128	9/30/13	ROBERT C. WELCH	APPROVED FOR CONSTRUCTION

DESIGNED BY N. MELTON
DRAWN BY N. MELTON
CHECKED BY J. SCHICK
IN CHARGE R. WELCH
DATE 3/8/13

REGISTERED PROFESSIONAL ENGINEER — ROBERT C. WELCH — No. C78128 — Exp. 09-30-15 — CIVIL — STATE OF CALIFORNIA

Exposition Metro Line Construction Authority
Expo
EXPO SKANSKA RADOS
444 South Flower Street
Suite 2200
Los Angeles, CA 90071
TEL (213) 443-7463
FAX (213) 362-9481
PARSONS BRINCKERHOFF
CURRENT STATUS
Exposition Construction Authority
Approved for Construction
Drawings - AFC
FEB 26 2014

EXPOSITION LRT PROJECT- PHASE 2
STORM DRAIN SEGMENT 3C
COLORADO AVE / 5TH ST
PLAN
STA 13+50 TO STA 15+40

CONTRACT NO XP8902-002
DRAWING NO CD-3C-302 REV 2
SCALE HOR: 1"=20' VERT: 1"=4'
SHEET NO 45 OF 108

SCALES HORIZ SCALE: 1"=20' VERT SCALE: 1"=4'
SHEET
INDEX NUMBER

HernandezH 3:10:32 PM 12/9/2013
Plot Driver=EXPO2-Full-BW-pdf.plt
Pentable=EXPO2-PENTABLE.tbl
C:\Users\hernandezh\Desktop\WELCH9-2\expo2-cd-3C-302.plg

REVISION DATES (DESIGN STAGE ONLY)

Sheet Version 2.01

City of Santa Monica
Department of Public Works
1437 4th Street, Suite 300 Santa Monica, CA 90401
TEL. (310)458-8721 FAX. (310)393-4425
e-mail : smengineering@smgov.net

Plotted by: HernandezH 12/9/2013 C:\Users\hernandezh\Desktop\WELCH9-2\expo2-cd-3C-302.plg

CITY DRAWING NO. U9210
SHEET NO. 45 OF 108
APPROVED BY: LEON E. SWAIN, P.E., CITY ENGINEER — DATE: 2-19 2014
ENGINEERING
REFERENCE: SUBMITTED BY: REVIEWED: DATE: 2-19 2014 — REVIEWED: DATE: 2-19 2014 — REVIEWED: DATE: 2-19 2014 — DATE: 20
NO. DATE BY REVISIONS DESCRIPTION APPROVED
CITY

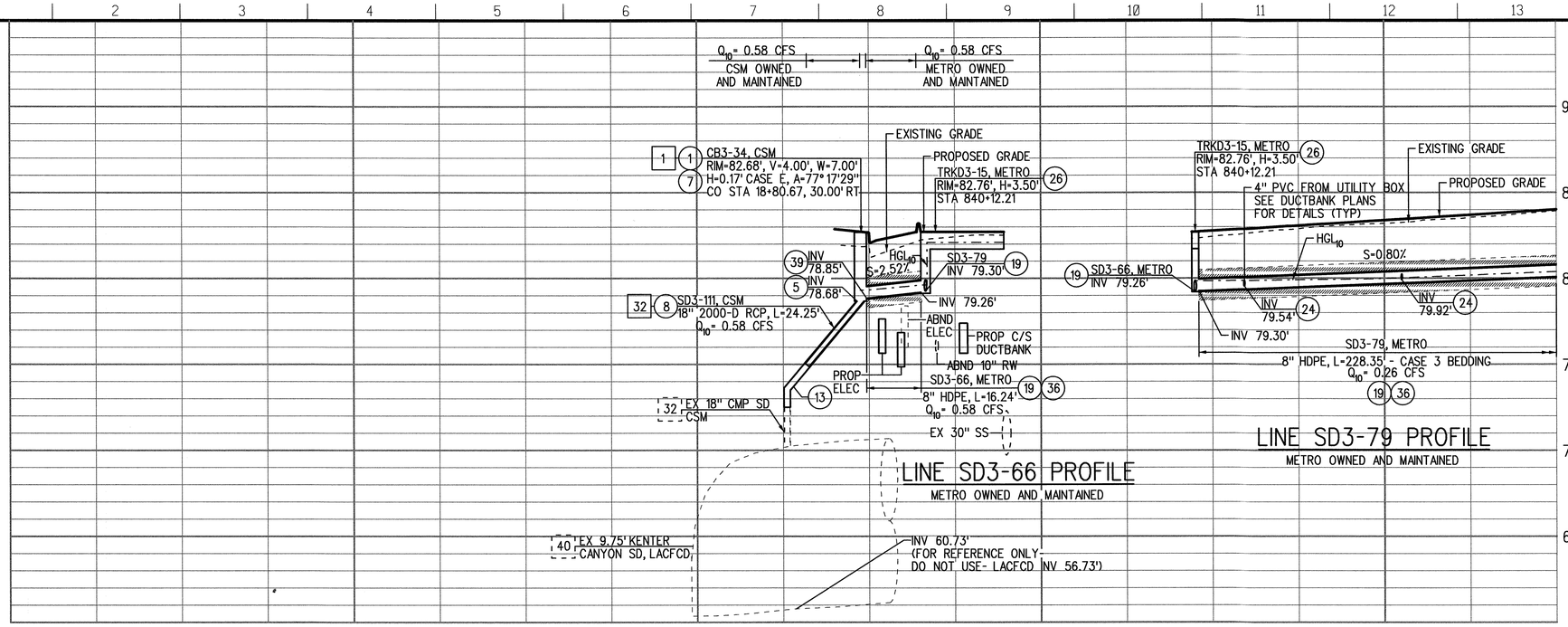

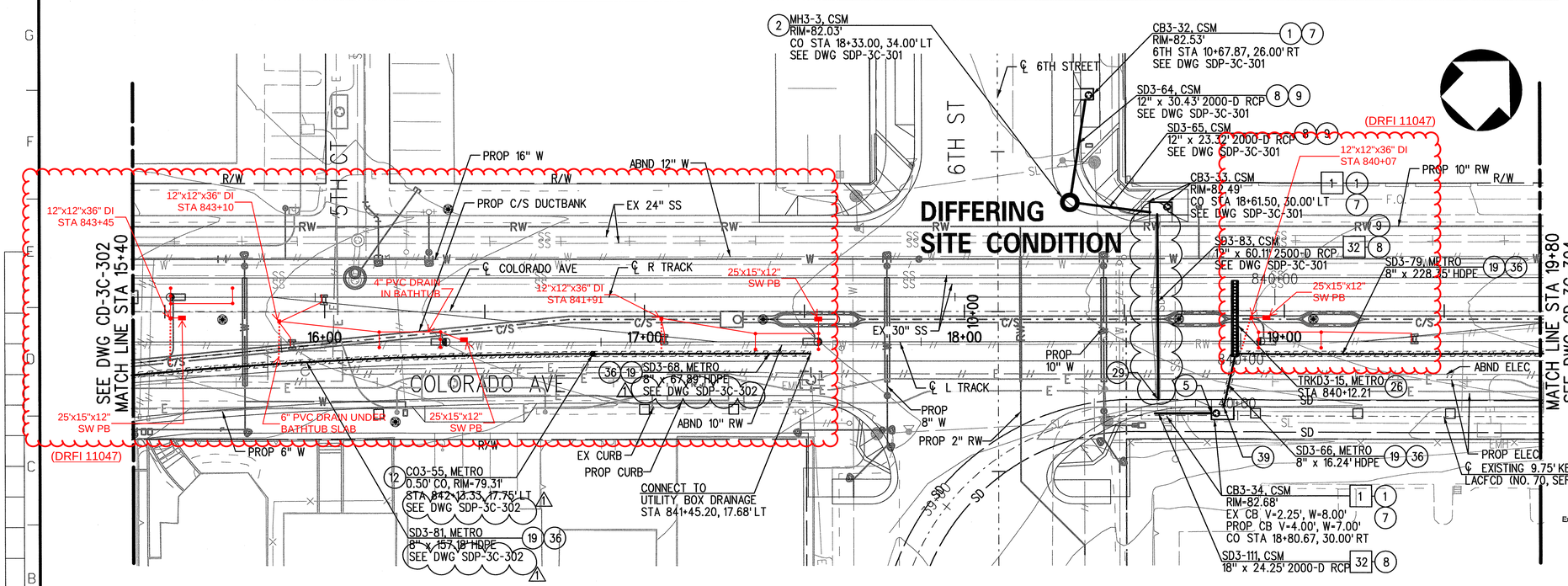

CONSTRUCTION NOTES

- CONSTRUCT
- EXISTING
- REMOVE
- REMODEL EXISTING
- REMOVE AND CONSTRUCT
- WORK BY OTHERS

NOTES:

1. FOR CONSTRUCTION NOTES SEE DWG CGG-101.
2. SEE UTILITY PLANS (UR) FOR EXISTING UTILITIES. UR-3C-303 & UR-3C-304
3. SEE STREET IMPROVEMENT PLANS (CA) FOR PROPOSED CONSTRUCTION OF ROADWAY IMPROVEMENTS AND VERIFICATION OF RIM ELEVATIONS.
4. SEE STREET LIGHTING PLANS (SL) FOR EXACT LOCATIONS AND DETAILS.
5. SEE TRAFFIC SIGNAL PLANS (TR) FOR TRAFFIC SIGNAL POLE AND EQUIPMENT LOCATIONS AND DETAILS.
6. SEE SIGNING AND STRIPING PLANS (SS) FOR SIGNING AND STRIPING LOCATIONS AND DETAILS.
7. SEE TRACKWORK PLANS (T) FOR TRACK RELATED WORK.
8. SEE RIGHT-OF-WAY PLANS FOR RIGHT-OF-WAY TAKE AND TEMPORARY CONSTRUCTION EASEMENTS.
9. SEE DUCTBANK PLANS (NX) FOR EXACT LOCATIONS AND DETAILS.
10. SEE GUIDEWAY PLANS (GC) FOR FENCE REQUIREMENTS IN METRO R/W.
11. SEE GRADE CROSSING PLANS (GX) FOR GRADE CROSSING EQUIPMENT LOCATIONS AND DETAILS.
12. SEE FIBER OPTIC PLANS FOR EXACT LOCATION OF CSM FIBER OPTIC INTERCONNECT.
13. CONTRACTOR TO VERIFY EXISTING UTILITY LOCATIONS AND DEPTH.
14. ALL NEW AND REMOVED/REPLACED CATCH BASINS UNDER THIS PROJECT SHALL INCLUDE CATCH BASIN FILTER INSERTS AND CATCH BASIN OPENING SCREENS. REUSE EXISTING INSERTS AND SCREENS WHEN APPLICABLE.
15. ALL NEW AND REMOVED/REPLACED CATCH BASINS UNDER THIS PROJECT SHALL BE STENCILED WITH PROHIBITIVE LANGUAGE, "NO DUMPING - DRAINS TO OCEAN".
16. OBTAIN LACFCD PERMIT PRIOR TO TIE IN TO ALL LACFCD FACILITIES.
17. SEE TRACTION POWER SYSTEMS PLANS (P) FOR GRADING DETAILS FOR TPSS & RADIO SITES.
18. STATIONING OFF R TRACK UNLESS OTHERWISE NOTED.
19. THOMAS GUIDE PAGE AND GRID NO. 671-E2.

SRJV
AUG 07 2013
ISSUED FOR CONSTRUCTION

Exposition Construction Authority
Approved for Construction
Drawings - AFC
AUG 05 2013

20' 0 20' 40'
HORIZ:1"=20'

REV	DATE	BY	APP	REG NO	EXPIRES	SEAL HOLDER	DESCRIPTION
1	2/28/13	NM	RCW	C78128	9/30/13	ROBERT C. WELCH	EC103
0	12/14/12	NM	RCW	C78128	9/30/13	ROBERT C. WELCH	APPROVED FOR CONSTRUCTION

REVISION DATES (DESIGN STAGE ONLY)

DESIGNED BY N. MELTON
DRAWN BY N. MELTON
CHECKED BY J. SCHICK
IN CHARGE R. WELCH
DATE 2/28/13

REGISTERED PROFESSIONAL ENGINEER ROBERT C. WELCH No. C78128 Exp. 09-30-13 CIVIL STATE OF CALIFORNIA

Exposition Metro Line Construction Authority
Expo
EXPO SKANSKA RADOS
444 South Flower Street
Suite 2200
Los Angeles, CA 90071
TEL (213) 443-7463
FAX (213) 362-9481
PARSONS BRINCKERHOFF

EXPOSITION LRT PROJECT- PHASE 2
STORM DRAIN SEGMENT 3C
COLORADO AVE / 6TH ST
PLAN & PROFILE
STA 15+40 TO STA 19+80

CONTRACT NO XP8902-002
DRAWING NO CD-3C-303 REV 1
SCALE HOR: 1"=20' VERT: 1"=4'
SHEET NO 46 OF 108

hernandezh 4:11:06 PM 2/28/2013
Plot Driver=EXPO2-Half-BW-pdf.plt Pentable=EXPO2-PENTABLE.tbl C:\Users\hernandezh\Desktop\CD28\expo2-cd-3C-303.plg

SCALES HORIZ SCALE: 1"=20' VERT SCALE: 1"=4' CURRENT STATUS SHEET INDEX NUMBER

Sheet Version 2.81

REFERENCE : SUBMITTED BY: Doug deVinney
CITY DRAWING NO. U9210
SHEET NO: 46 OF 108
DATE 4-09 2013
APPROVED BY: LEON E. SWAIN, P.E., CITY ENGINEER
ENGINEERING
REVIEWED : DATE : 20__
CITY

NO.	DATE	BY	DESCRIPTION	APPROVED
			REVISIONS	

City of Santa Monica
Department of Public Works
1437 4th Street, Suite 300 Santa Monica, CA 90401
TEL. (310)458-8721 FAX. (310)393-4425
e-mail : smengineering@smgov.net

Plotted by: hernandezh 2/28/2013 C:\Users\hernandezh\Desktop\CD28\expo2-cd-3C-303.pdw

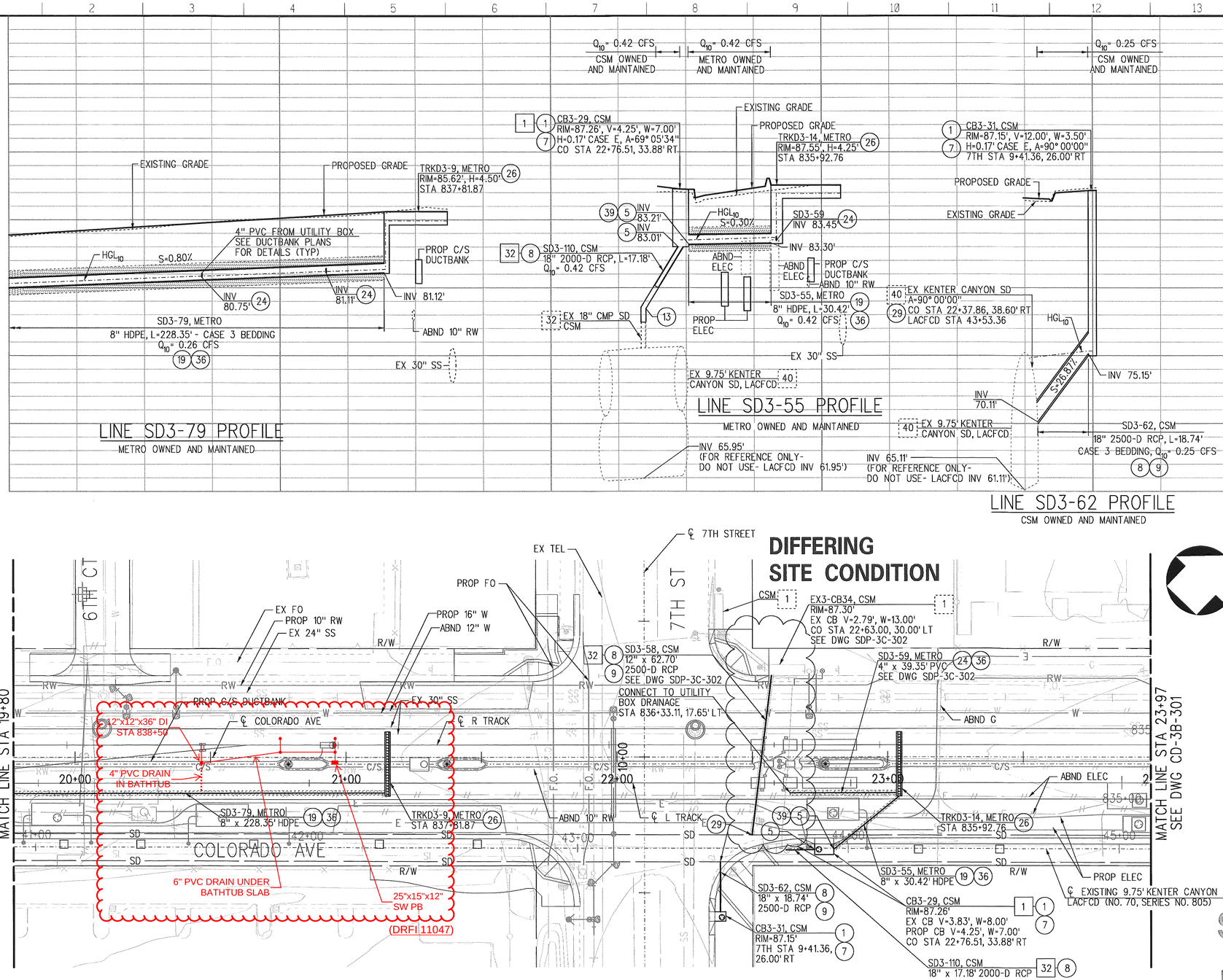

CONSTRUCTION NOTES

- CONSTRUCT
- EXISTING
- REMOVE
- REMODEL EXISTING
- REMOVE AND CONSTRUCT
- WORK BY OTHERS

NOTES:

1. FOR CONSTRUCTION NOTES SEE DWG CGG-101.
2. SEE UTILITY PLANS (UR) FOR EXISTING UTILITIES. UR-3C-304 & UR-3C-305
3. SEE STREET IMPROVEMENT PLANS (CA) FOR PROPOSED CONSTRUCTION OF ROADWAY IMPROVEMENTS AND VERIFICATION OF RIM ELEVATIONS.
4. SEE STREET LIGHTING PLANS (SL) FOR EXACT LOCATIONS AND DETAILS.
5. SEE TRAFFIC SIGNAL PLANS (TR) FOR TRAFFIC SIGNAL POLE AND EQUIPMENT LOCATIONS AND DETAILS.
6. SEE SIGNING AND STRIPING PLANS (SS) FOR SIGNING AND STRIPING LOCATIONS AND DETAILS.
7. SEE TRACKWORK PLANS (T) FOR TRACK RELATED WORK.
8. SEE RIGHT-OF-WAY PLANS FOR RIGHT-OF-WAY TAKE AND TEMPORARY CONSTRUCTION EASEMENTS.
9. SEE DUCTBANK PLANS (NX) FOR EXACT LOCATIONS AND DETAILS.
10. SEE GUIDEWAY PLANS (GC) FOR FENCE REQUIREMENTS IN METRO R/W.
11. SEE GRADE CROSSING PLANS (GX) FOR GRADE CROSSING EQUIPMENT LOCATIONS AND DETAILS.
12. SEE FIBER OPTIC PLANS FOR EXACT LOCATION OF CSM FIBER OPTIC INTERCONNECT.
13. CONTRACTOR TO VERIFY EXISTING UTILITY LOCATIONS AND DEPTH.
14. ALL NEW AND REMOVED/REPLACED CATCH BASINS UNDER THIS PROJECT SHALL INCLUDE CATCH BASIN FILTER INSERTS AND CATCH BASIN OPENING SCREENS. REUSE INSERTS AND SCREENS WHEN APPLICABLE.
15. ALL NEW AND REMOVED/REPLACED CATCH BASINS UNDER THIS PROJECT SHALL BE STENCILED WITH PROHIBITIVE LANGUAGE, "NO DUMPING - DRAINS TO OCEAN".
16. OBTAIN LACFCD PERMIT PRIOR TO TIE IN TO ALL LACFCD FACILITIES.
17. SEE TRACTION POWER SYSTEMS PLANS (P) FOR GRADING DETAILS FOR TPSS & RADIO SITES.
18. STATIONING OFF R TRACK UNLESS OTHERWISE NOTED.
19. THOMAS GUIDE PAGE AND GRID NO. 671-E2.

Expoition Construction Authority
Approved for Construction
Drawings - AFC
JAN 10 2013

SRJV
JAN 10 2013
ISSUED FOR CONSTRUCTION

20' 0 20' 40'
HORIZ:1"=20'

REV	DATE	BY	APP	REG NO	EXPIRES	SEAL HOLDER	DESCRIPTION
0	12/14/12	NM	RCW	C78128	9/30/13	ROBERT C. WELCH	APPROVED FOR CONSTRUCTION

REVISION DATES (DESIGN STAGE ONLY)

DESIGNED BY N. MELTON
DRAWN BY L. SANCHEZ
CHECKED BY J. SCHICK
IN CHARGE R. WELCH
DATE 12/14/12

REGISTERED PROFESSIONAL ENGINEER ROBERT C. WELCH No. C78128 Exp. 09-30-13 CIVIL STATE OF CALIFORNIA

Exposition Metro Line Construction Authority
Expo
EXPO SKANSKA RADOS
444 South Flower Street
Suite 2200
Los Angeles, CA 90071
TEL (213) 443-7463
FAX (213) 362-9481
PARSONS BRINCKERHOFF
CURRENT STATUS

EXPOSITION LRT PROJECT- PHASE 2
STORM DRAIN SEGMENT 3C
COLORADO AVE / 7TH ST
PLAN & PROFILE
STA 19+80 TO STA 23+97

CONTRACT NO XP8902-002
DRAWING NO CD-3C-304 REV 0
SCALE HOR: 1"=20' VERT: 1"=4'
SHEET NO 47 OF 108

hernandezh 9:00:43 AM 12/13/2012
Plot Driver=EXPO2-Full-BW-pdf.pltt Pentable=EXPO2-PENTABLE.tbl
C:\Users\hernandezh\Desktop\drainage DEC\expo2-cd-3C-304.plg

SCALES HORIZ SCALE: 1"=20' VERT SCALE: 1"=4' | SHEET | INDEX NUMBER

Sheet Version 2.01

CITY DRAWING NO. U9210
SHEET NO. 47 OF 108
DATE 1-09-2013
SUBMITTED BY: Doug deVinney
APPROVED BY: Gene Smith, LESLIE E. SWANN, P.E., CITY ENGINEER
REFERENCE
REVIEWED DATE 1-09-2013 CITY
APPROVED

NO.	DATE	BY	DESCRIPTION
			REVISIONS

City of Santa Monica
Department of Public Works
1437 4th Street, Suite 300 Santa Monica, CA 90401
TEL. (310)458-8721 FAX. (310)393-4425
e-mail : smengineering@smgov.net

Plotted by: hernandezh 12/13/2012 C:\Users\hernandezh\Desktop\drainage DEC\expo2-cd-3C-304.plg

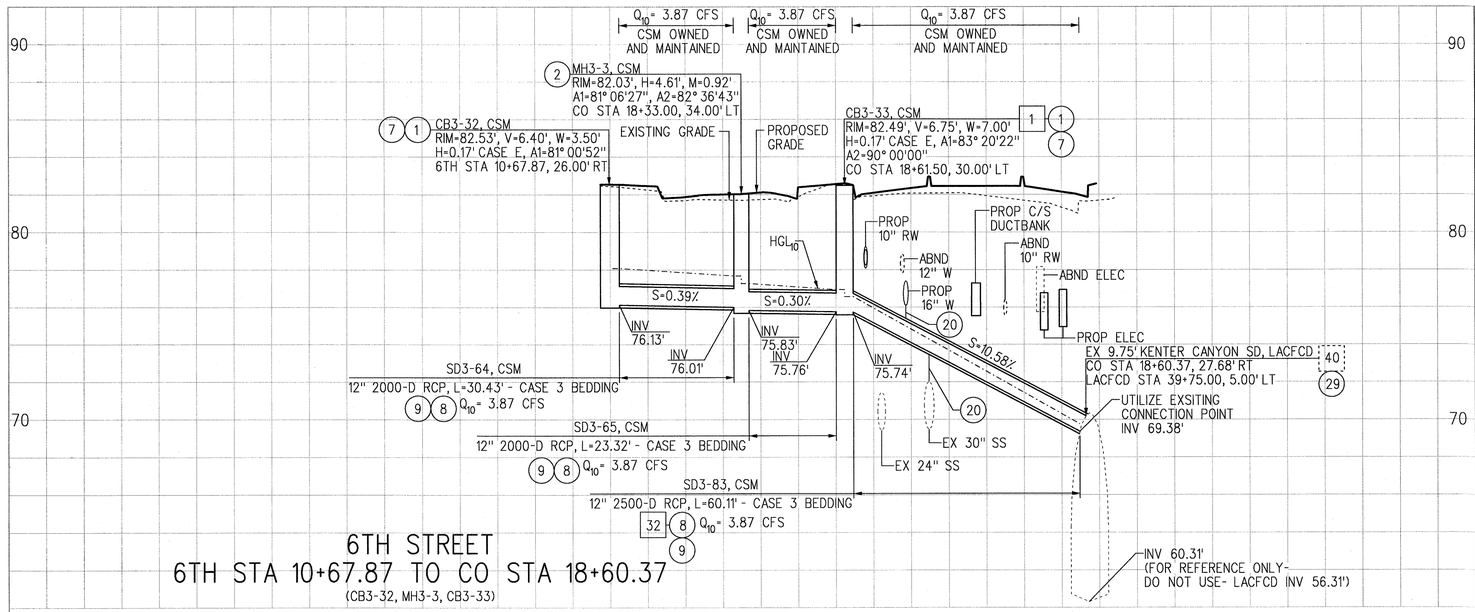

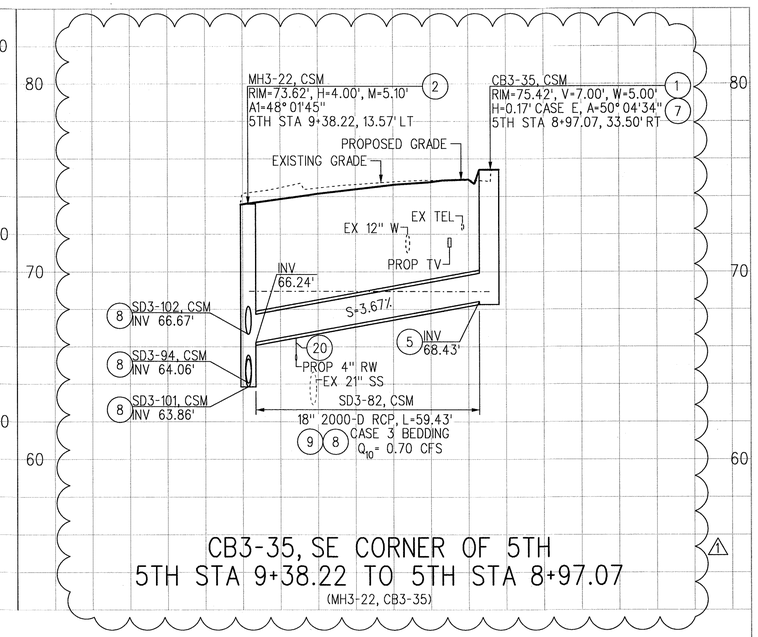

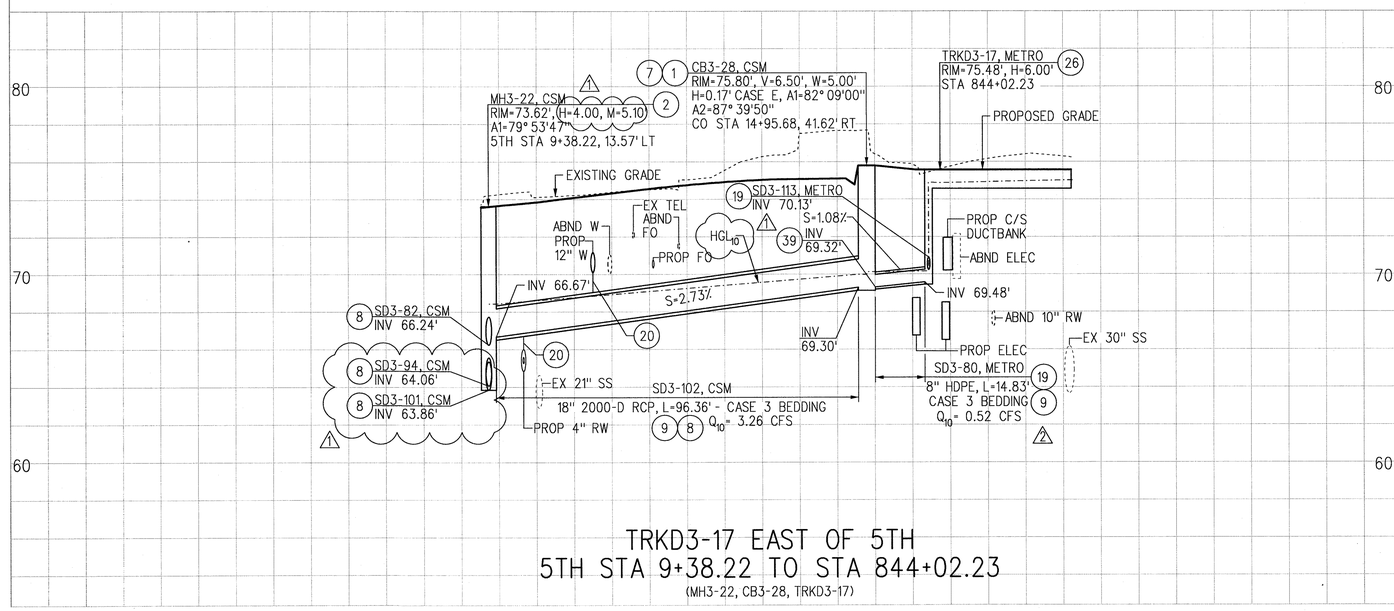

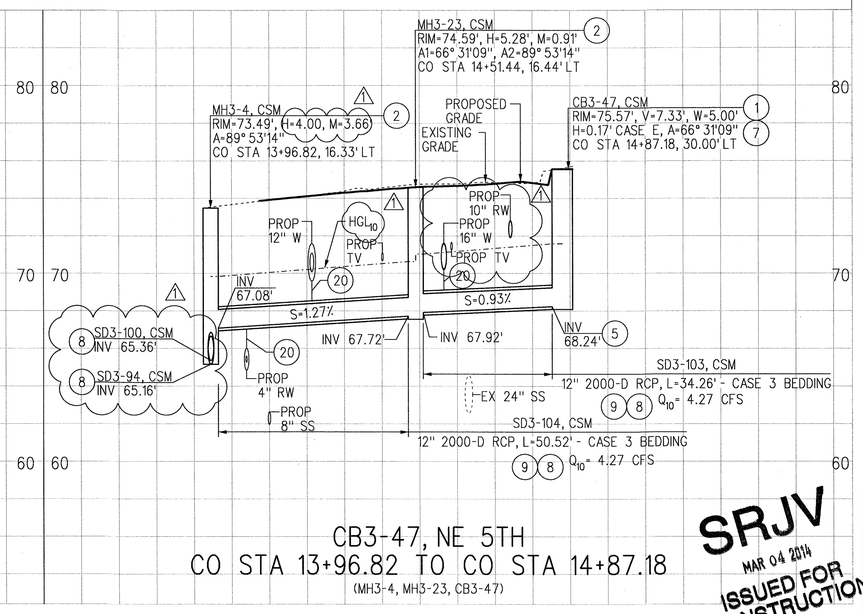

SRJV
MAR 04 2014
ISSUED FOR CONSTRUCTION

20' 0 20' 40'
HORIZ:1"=20'

REV	DATE	BY	APP	REG NO	EXPIRES	SEAL HOLDER	DESCRIPTION
2	12/9/13	NM	RCW	C78128	9/30/15	ROBERT C. WELCH	ECI 41
1	3/8/13	NM	RCW	C78128	9/30/13	ROBERT C. WELCH	ECI 03
0	12/14/12	NM	RCW	C78128	9/30/13	ROBERT C. WELCH	APPROVED FOR CONSTRUCTION

REVISION DATES (DESIGN STAGE ONLY)

DESIGNED BY N. MELTON
DRAWN BY N. MELTON
CHECKED BY J. SCHICK
IN CHARGE R. WELCH
DATE 3/8/13

REGISTERED PROFESSIONAL ENGINEER — ROBERT C. WELCH — No. C78128 — Exp. 09-30-15 — CIVIL — STATE OF CALIFORNIA

Exposition Metro Line Construction Authority
Expo
EXPO SKANSKA RADOS
444 South Flower Street
Suite 2200
Los Angeles, CA 90071
TEL (213) 443-7463
FAX (213) 362-9481

PARSONS BRINCKERHOFF

CURRENT STATUS

Exposition Construction Authority Approved for Construction Drawings - AFC
MAR 03 2014

EXPOSITION LRT PROJECT- PHASE 2
STORM DRAIN
SEGMENT 3C
PROFILES

CONTRACT NO XP8902-002
DRAWING NO SDP-3C-301 REV 2
SCALE HOR: 1"=20' VERT: 1"=5'
SHEET NO 48 OF 108

HernandezH 3:10:54 PM 12/9/2013
Plot Driver=EXPO2-Full-BW-pdf.plt Pentable=EXPO2-PENTABLE.tbl
C:\Users\hernandezh\Desktop\WELCH9-2\expo2-sdp-3C-301.plg

SCALES: HORIZ SCALE: 1"=20' VERT SCALE: 1"=5'
SHEET
INDEX NUMBER

Sheet Version 2dll

CITY DRAWING NO. U9210
SHEET NO. 48 OF 108
DATE 2-19 2014
REFERENCE
SUBMITTED BY
APPROVED BY LEON E. SWANN, P.E., CITY ENGINEER
REVIEWED DATE 2-19 2014
REVIEWED DATE 2-19 2014
REVIEWED DATE 2-19 2014
REVISIONS: NO. DATE BY DESCRIPTION
APPROVED

City of Santa Monica
Department of Public Works
1437 4th Street, Suite 300 Santa Monica, CA 90401
TEL. (310)458-8721 FAX. (310)393-4425
e-mail : smengineering@smgov.net

Plotted by: HernandezH 12/9/2013 C:\Users\hernandezh\Desktop\WELCH9-2\expo2-sdp-3C-301.plg

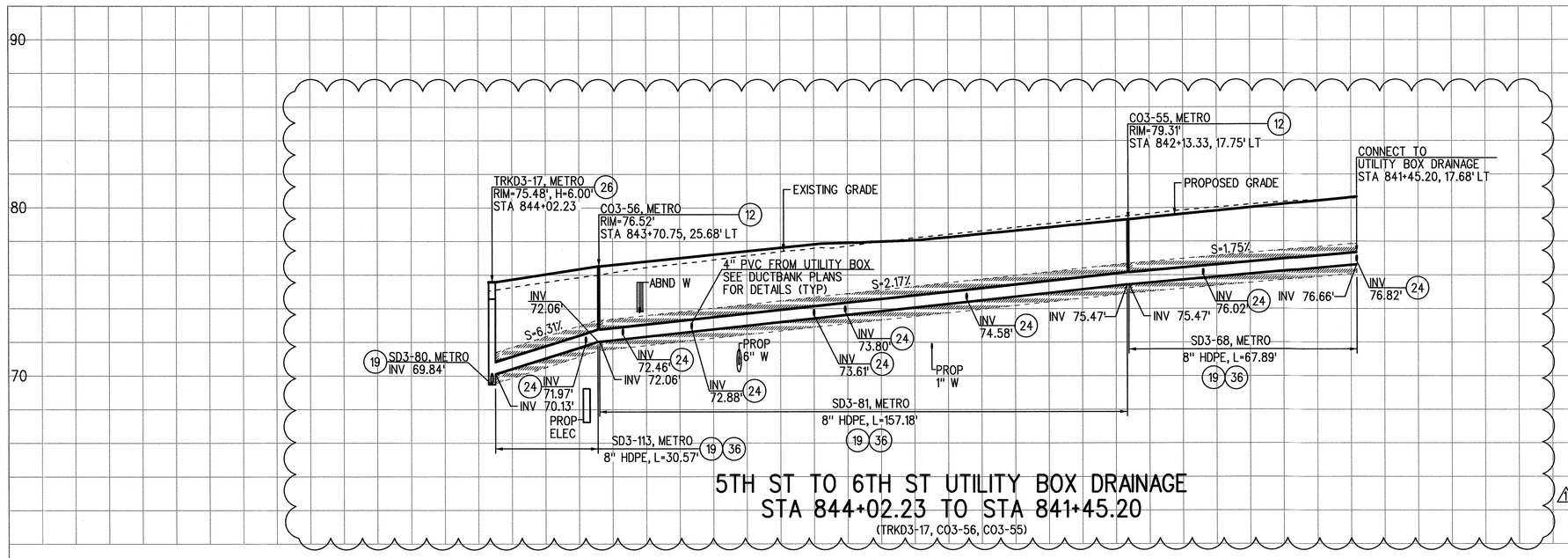

5TH ST TO 6TH ST UTILITY BOX DRAINAGE
STA 844+02.23 TO STA 841+45.20
(TRKD3-17, CO3-56, CO3-55)

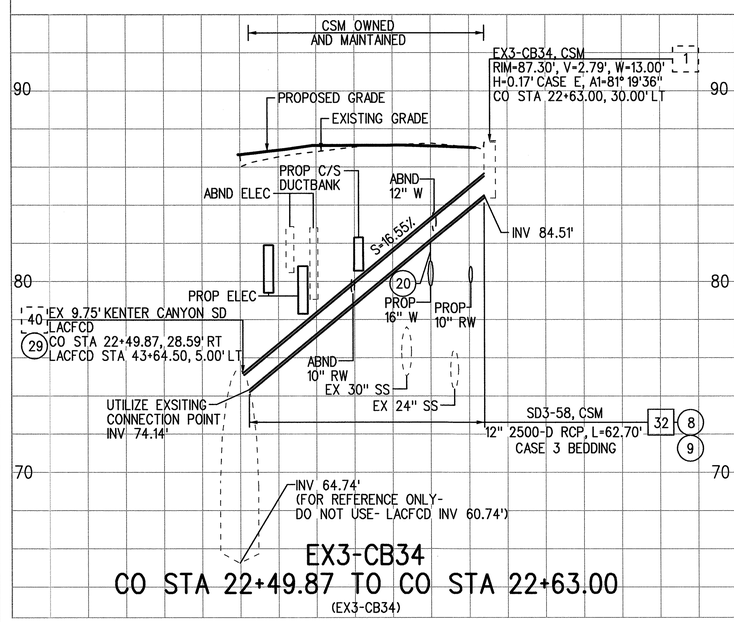

EX3-CB34
CO STA 22+49.87 TO CO STA 22+63.00
(EX3-CB34)

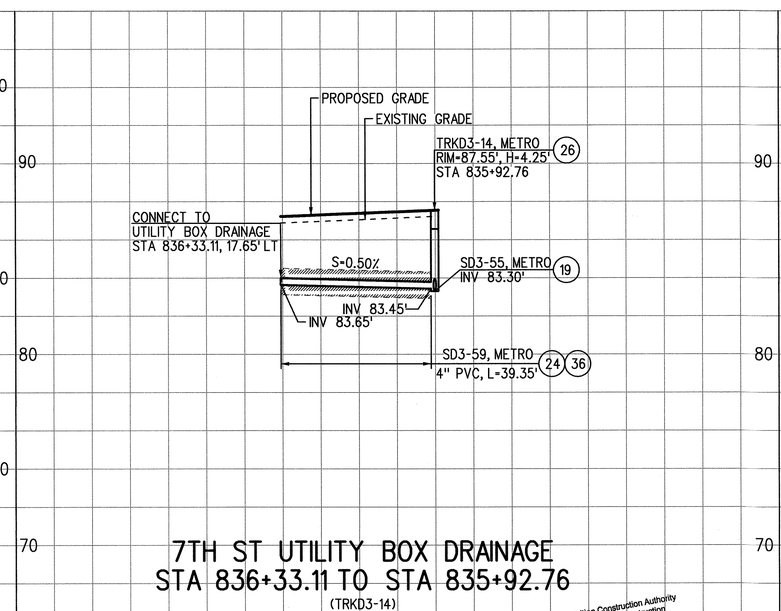

7TH ST UTILITY BOX DRAINAGE
STA 836+33.11 TO STA 835+92.76
(TRKD3-14)

Exposition Construction Authority
Approved for Construction
Drawings - AFC
AUG 05 2013

SRJV
AUG 07 2013
ISSUED FOR CONSTRUCTION

20' 0 20' 40'
HORIZ:1"=20'

REV	DATE	BY	APP	REG NO	EXPIRES	SEAL HOLDER	DESCRIPTION
1	2/28/13	NM	RCW	C78128	9/30/13	ROBERT C. WELCH	ECI03
0	12/14/12	NM	RCW	C78128	9/30/13	ROBERT C. WELCH	APPROVED FOR CONSTRUCTION

REVISION DATES (DESIGN STAGE ONLY)

DESIGNED BY N. MELTON
DRAWN BY N. MELTON
CHECKED BY J. SCHICK
IN CHARGE R. WELCH
DATE 2/28/13

REGISTERED PROFESSIONAL ENGINEER
ROBERT C. WELCH
No. C78128
Exp. 09-30-13
CIVIL
STATE OF CALIFORNIA

Exposition Metro Line Construction Authority
Expo
EXPO SKANSKA RADOS
444 South Flower Street
Suite 2200
Los Angeles, CA 90071
TEL (213) 443-7463
FAX (213) 362-9481
PARSONS BRINCKERHOFF

EXPOSITION LRT PROJECT- PHASE 2
STORM DRAIN
SEGMENT 3C
PROFILES

CONTRACT NO XP8902-002
DRAWING NO SDP-3C-302 REV 1
SCALE HOR: 1"=20' VERT: 1"=5'
SHEET NO 49 OF 108

hernandezh 4:11:10 PM 2/28/2013
Plot Driver=EXPO2-Half-BW-pdf.plt Pentable=EXPO2-PENTABLE.tbl
C:\Users\hernandezh\Desktop\CD28\expo2-sdp-3C-302.plg

SCALES HORIZ SCALE: 1"=20' VERT SCALE: 1"=5'
SHEET
INDEX NUMBER

CURRENT STATUS

Sheet Version 2.01

REFERENCE :
SUBMITTED BY: Dwayne DeJohn
CITY DRAWING NO. U9210
SHEET NO: 49 OF 108
DATE 4-09 2013
APPROVED BY: LEON E. SWANN, P.E., CITY ENGINEER
ENGINEERING

REVIEWED : DATE : 20__
REVIEWED : DATE : 20__
REVIEWED : DATE : 20__
CITY

NO.	DATE	BY	DESCRIPTION

REVISIONS
APPROVED

City of Santa Monica
Department of Public Works
1437 4th Street, Suite 300 Santa Monica, CA 90401
TEL. (310)458-8721 FAX. (310)393-4425
e-mail : smengineering@smgov.net

Plotted by: hernandezh 2/28/2013 C:\Users\hernandezh\Desktop\CD28\expo2-sdp-3C-302.plo

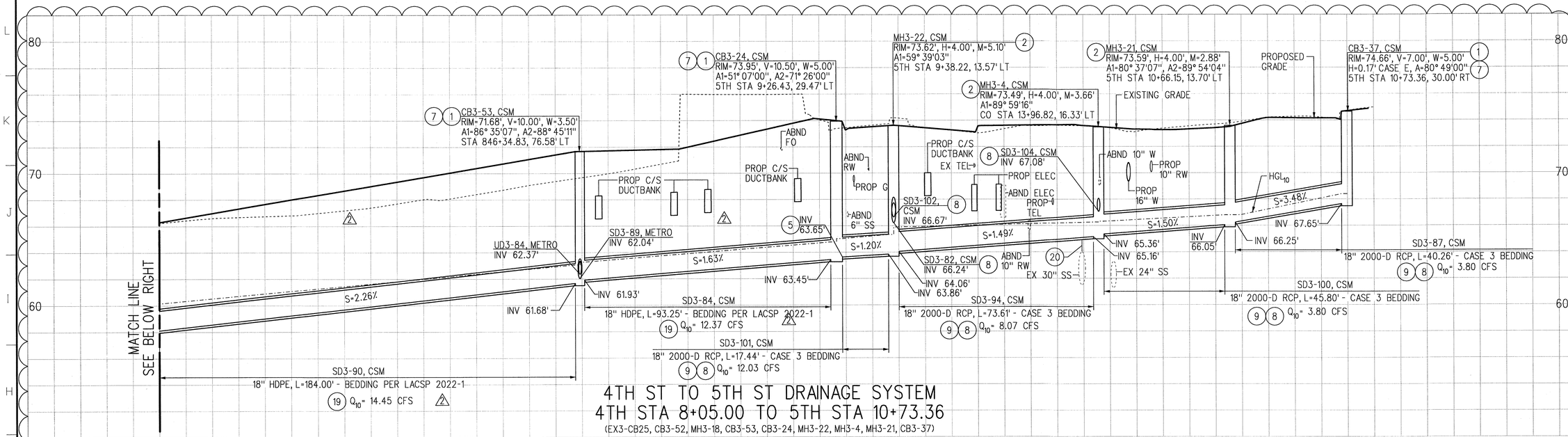

4TH ST TO 5TH ST DRAINAGE SYSTEM
4TH STA 8+05.00 TO 5TH STA 10+73.36
(EX3-CB25, CB3-52, MH3-18, CB3-53, CB3-24, MH3-22, MH3-4, MH3-21, CB3-37)

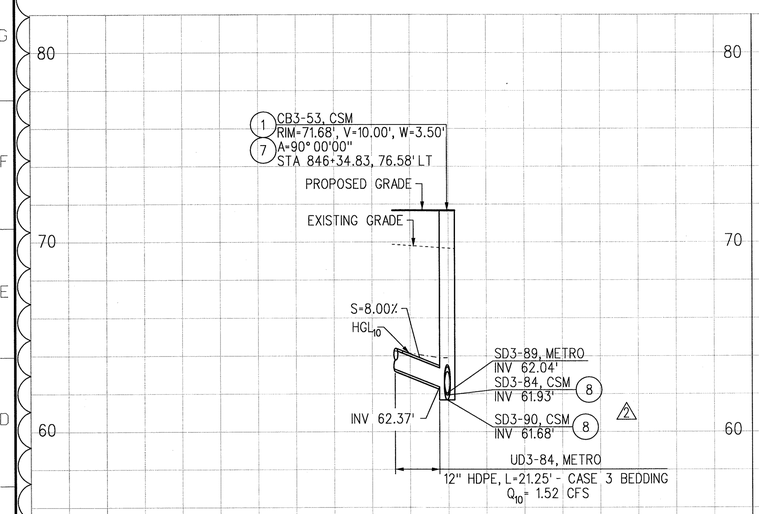

UD3-84 FROM GUIDEWAY PACKAGE
STA 846+34.83
(CB3-53)

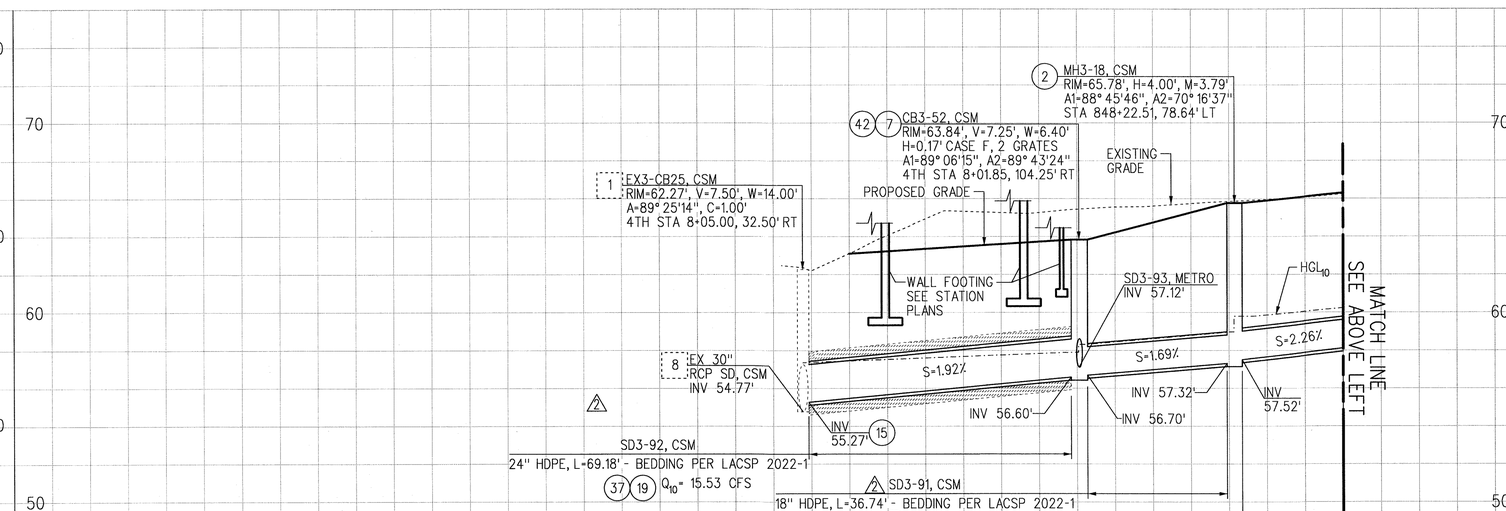

4TH ST TO 5TH ST DRAINAGE SYSTEM
4TH STA 8+05.00 TO 5TH STA 10+73.36
(EX3-CB25, CB3-52, MH3-18, CB3-53, CB3-24, MH3-22, MH3-4, MH3-21, CB3-37)

20' 0 20' 40'
HORIZ:1"=20'

SRJV
MAR 04 2014
ISSUED FOR CONSTRUCTION

REV	DATE	BY	APP	REG NO	EXPIRES	SEAL HOLDER	DESCRIPTION
2	12/9/13	NM	RCW	C78128	9/30/15	ROBERT C. WELCH	ECI41, ECI43.1
1	3/8/13	NM	RCW	C78128	9/30/13	ROBERT C. WELCH	ECI03
0	12/14/12	NM	RCW	C78128	9/30/13	ROBERT C. WELCH	APPROVED FOR CONSTRUCTION

REVISION DATES (DESIGN STAGE ONLY)

DESIGNED BY N. MELTON
DRAWN BY N. MELTON
CHECKED BY J. SCHICK
IN CHARGE R. WELCH
DATE 3/8/13

REGISTERED PROFESSIONAL ENGINEER — ROBERT C. WELCH, C78128, Exp. 09-30-15, CIVIL, STATE OF CALIFORNIA

Exposition Metro Line Construction Authority
Expo
EXPO SKANSKA RADOS
444 South Flower Street
Suite 2200
Los Angeles, CA 90071
TEL (213) 443-7463
FAX (213) 362-9481

PARSONS BRINCKERHOFF

CURRENT STATUS

Exposition Construction Authority Approved for Construction Drawings - AFC
MAR 04 2014

EXPOSITION LRT PROJECT- PHASE 2
STORM DRAIN
SEGMENT 3C
PROFILES

CONTRACT NO XP8902-002
DRAWING NO SDP-3C-303 REV 2
SCALE HOR: 1"=20' VERT: 1"=5'
SHEET NO 50 OF 108

HernandezH 3:10:55 PM 12/9/2013
Plot Driver=EXPO2-Full-BW-pdf.plt Pentable=EXPO2-PENTABLE.tbl
C:\Users\hernandezh\Desktop\WELCH9-2\expo2-sdp-3C-303.plg

SCALES HORIZ SCALE: 1"=20' VERT SCALE: 1"=5'
SHEET
INDEX NUMBER

Sheet Version 2.01

CITY DRAWING NO. U9210
SHEET NO. 50 OF 108
DATE 2-19 2014
REFERENCE
SUBMITTED BY
APPROVED BY: KEVIN E. SWAIN, P.E., CITY ENGINEER — ENGINEERING
DATE 2-19 2014
REVIEWED
DATE 2-19 2014
REVIEWED
DATE 2-19 2014
REVIEWED
CITY APPROVED

REVISIONS: NO. DATE BY DESCRIPTION

City of Santa Monica
Department of Public Works
1437 4th Street, Suite 300 Santa Monica, CA 90401
TEL. (310)458-8721 FAX. (310)393-4425
e-mail : smengineering@smgov.net

Plotted by: HernandezH 12/9/2013 C:\Users\hernandezh\Desktop\WELCH9-2\expo2-sdp-3C-303.plg

EXPOSITION METRO LINE CONSTRUCTION AUTHORITY

Expo

EXPOSITION LIGHT RAIL TRANSIT PROJECT- PHASE 2

WATER RELOCATIONS FOR SEGMENT 3C 5th to 7th

SHT NO.	DRAWING NO.	SHEET TITLE
1.	UW-3C-101	WATER RELOCATION VICINITY MAP & KEYMAP
2.	UW-3C-102	WATER RELOCATION CONSTRUCTION NOTES
3.	UW-3C-201	WATER RELOCATION PLAN & PROFILE - COLORADO AVE STA 9+50 TO STA 13+00
4.	UW-3C-202	WATER RELOCATION PLAN & PROFILE - COLORADO AVE STA 13+00 TO STA 16+50
5.	UW-3C-203	WATER RELOCATION PLAN & PROFILE - COLORADO AVE STA 16+50 TO STA 20+00
6.	UW-3C-204	WATER RELOCATION PLAN & PROFILE - COLORADO AVE STA 20+00 TO STA 23+50
7.	UW-3C-301	WATER RELOCATION CROSS SECTION 1 OF 3
8.	UW-3C-302	WATER RELOCATION CROSS SECTION 2 OF 3
9.	UW-3C-303	WATER RELOCATION CROSS SECTION 3 OF 3
10.	UW-3C-401	WATER RELOCATION CONNECTION DETAIL 1 OF 4
11.	UW-3C-402	WATER RELOCATION CONNECTION DETAIL 2 OF 4
12.	UW-3C-403	WATER RELOCATION CONNECTION DETAIL 3 OF 4
13.	UW-3C-404	WATER RELOCATION CONNECTION DETAIL 4 OF 4
14.	UW-3C-501	WATER RELOCATION MISCELLANEOUS WATER DETAILS
15.	UW-3C-502	WATER RELOCATION CATHODIC PROTECTION DETAILS

Note: Conditions of Approval are for these construction plans only.

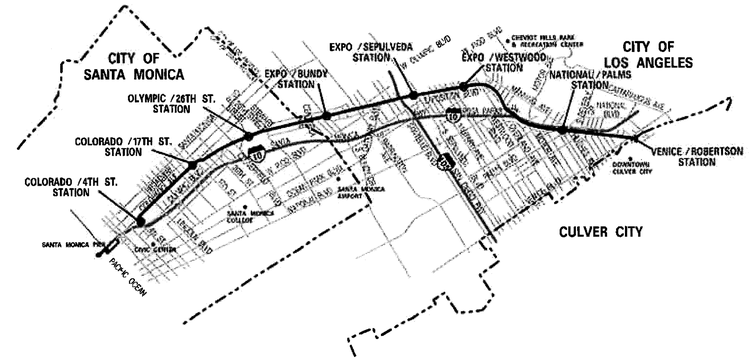

VICINITY MAP

NO SCALE

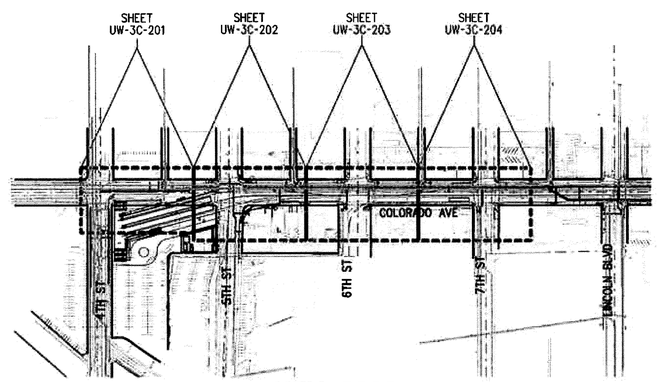

KEY MAP

NO SCALE

SRJV
MAR 08 2013
ISSUED FOR CONSTRUCTION

REV	DATE	BY	APP	REG NO	EXPIRES	SEAL HOLDER	DESCRIPTION
0	11/21/12	KY	RG	C74831	12/31/13	RAFAEL GONZALEZ	APPROVED FOR CONSTRUCTION

REVISION DATES (DESIGN STAGE ONLY)

DESIGNED BY K. YAMAKAWA
DRAWN BY K. YAMAKAWA
CHECKED BY R. GONZALEZ
IN CHARGE R. GONZALEZ
DATE 11/21/12

REGISTERED PROFESSIONAL ENGINEER RAFAEL GONZALEZ No. C74831 Exp. 12-31-13 CIVIL STATE OF CALIFORNIA

Exposition Metro Line Construction Authority
Expo
EXPO SKANSKA RADOS
444 South Flower Street
Suite 2200
Los Angeles, CA 90071
TEL (213) 443-7463
FAX (213) 362-9481
PARSONS BRINCKERHOFF

EXPOSITION LRT PROJECT- PHASE 2
WATER RELOCATION
VICINITY MAP & KEY MAP
Exposition Construction Authority
Approved for Construction
Drawings - AFC
MAR 07 2013

CONTRACT NO XP8902-002
DRAWING NO UW-3C-101 REV 0
SCALE NO SCALE
SHEET NO 51 OF 108

City of Santa Monica
Department of Public Works
1437 4th Street, Suite 300 Santa Monica, CA 90401
TEL. (310)458-8721 FAX. (310)393-4425
e-mail : smengineering@smgov.net

CITY DRAWING NO U9211
SHEET NO. 51 OF 108
DATE 2-26-13
LEON E. SWANN, P.E. CITY ENGINEER

gonzalez 4:01:28 PM 11/21/2012
Plot Driver=EXPO2-Half-BW-pdf.plt Pentable=EXPO2-PENTABLE.tbl C:\EXPO2\Batch Plot\3C\expo2-UW-3C-101.plg

SCALES HORIZ SCALE: VERT SCALE:
SHEET
INDEX NUMBER

Plotted by: gonzalez 11/21/2012 C:\EXPO2\Batch Plot\3C\expo2-UW-3C-101.plg

Sheet Version 2.01

CURRENT STATUS

CONSTRUCTION NOTES

1. PIPE MATERIALS AND INSTALLATION SHALL BE IN ACCORDANCE WITH THESE CONSTRUCTION DOCUMENTS, MANUFACTURER'S RECOMMENDATIONS, AND APPROVED SPECIFICATIONS.

2. CONTRACTOR SHALL FIELD VERIFY ALL WATER SERVICE CONNECTIONS AND FIRE LINE SERVICES SIZES AND LOCATIONS PRIOR TO COMMENCING WORK.

3. ALL DIP MECHANICAL JOINT FITTINGS SHALL BE RESTRAINED WITH MECHANICAL JOINT RESTRAINTS (MEGALUG 2000PV OR APPROVED EQUIVALENT)

4. THE CONTRACTOR SHALL ADJUST ALL VALVE SLEEVES TO FINISH GRADE UPON COMPLETION OF REPAVING. INSTALL VALVE STEM RISERS WHERE REQUIRED FOR WATER LINES WHEN DEPTH TO OPERATING NUT EXCEEDS 60", PER CITY OF SANTA MONICA STD DWG SMW 14.

5. ALL WATER LINE INSTALLATIONS SHALL BE CHLORINATED IN ACCORDANCE WITH THE STATE OF CALIFORNIA HEALTH DEPARTMENT, CONSISTING OF NOT LESS THAN 50 PPM INITIAL DOSAGE, WITH NOT LESS THAN 25 PPM RESIDUAL DOSAGE AFTER 24 HOURS AND ALLOWED TO STAND. INSTALLATIONS SHALL BE FLUSHED AND A 48-HOUR BACTITEST SHALL BE CONDUCTED FOLLOWING PRESSURE AND LEAKAGE TESTING. ALL TESTING METHODS SHALL BE SUBJECT TO APPROVAL BY THE CITY.

6. ALL DIP WATER LINE AND FITTINGS SHALL BE CEMENT LINED 350 PSI PRESSURE CLASS WITH POLYETHYLENE ENCASEMENT AND COMPLY WITH AWWA C151 & AWWA C110.

SEE DRFI 10292 AND 3RFI 20058 FOR DETAIL

7. CONCRETE THRUST/ANCHOR BLOCKS SHALL BE INSTALLED AT ALL TEES, BENDS, REDUCERS, GATE VALVES, DEAD ENDS AND PLUGGED PIPE ENDS WHERE INDICATED IN PLANS, PER STANDARD DRAWING SMW 11 TIE BACK RODS SHALL BE INSTALLED WHERE REQUIRED BY THE ENGINEER.

8. ALL FIRE HYDRANTS, VALVES, CP TEST STATIONS AND OTHER ASSOCIATED FACILITIES SHALL BE LOCATED IN THE FIELD AS DIRECTED BY THE CITY. THE LOCATION SHOWN ON THESE PLANS ARE APPROXIMATE.

9. REMOVAL OF THE EXISTING FIRE HYDRANTS WILL INCLUDE CUTTING FIRE HYDRANT BURY TO TWO FEET (2'-0") BELOW EXISTING GRADE AND BACKFILLING WITH CONCRETE. SALVAGED FIRE HYDRANTS SHALL BE MADE AVAILABLE TO THE CITY OR REUSED ON PROJECT.

10. WHERE "ABANDON OR EXISTING MAIN" APPEARS ON PLAN, CONTRACTOR SHALL CUT AND PLUG PER CITY OF SANTA MONICA STANDARD PLANS SMW 18.

11. COVER OVER TOP OF WATER MAIN SHALL BE 3'-0" MIN. UNLESS SHOWN OTHERWISE IN THE PLANS.

12. ALL WATER SERVICES AND FIRE LINES SHALL BE REPLACED OR RECONNECTED FROM THE NEW WATER LINE UP TO THE METER PER WATER PLANS UNLESS OTHERWISE SHOWN IN THE PLANS. RESPECTIVELY, WATER METERS SHALL BE RESET/ADJUSTED, IF REQUIRED. INSTALLATION SHALL FOLLOW THE STD. DWG'S SMW 4, 6, 7, 10 AND 19 AND SPECS.

13. CONTRACTOR SHALL INSTALL BY-PASS LINES PER THIS PLAN. THE MINIMUM BY-PASS PIPING SIZE SHALL EQUAL THE SIZE OF THE MAIN TO BE REPLACED.

14. THE CONTRACTOR SHALL "POTHOLE FOR TIE IN" PRIOR TO CONSTRUCTION TO FIELD VERIFY THE ACTUAL TIE IN CONNECTION TO THE EXISTING WATER SYSTEM. THE TIE IN WILL BE APPROVED BY THE CITY PRIOR TO CONSTRUCTION.

15. BYPASS WATER PLANS SHALL BE PROVIDED BY THE CONTRACTOR FOR ALL WATER MAINS TO BE REMOVED AND REPLACED AS SHOWN OR REQUIRED IN THE PLANS. ALL BYPASS PLANS SHALL BE IN ACCORDANCE WITH THE PROJECT SPECIFICATIONS AND COORDINATED AND APPROVED WITH THE CITY FIRE MARSHALL.

16. THE CONTRACTOR SHALL MAKE EXPLORATORY EXCAVATIONS A MINIMUM DISTANCE OF 100 FEET IN ADVANCE OF TRENCHING TO DETERMINE THE EXACT LOCATION AND DEPTH OF ALL UTILITIES CROSSING THE WATER MAIN ALONG COLORADO AVENUE. PIPE JOINTS SHALL BE DEFLECTED PER MANUFACTURER RECOMMENDATION TO CLEAR INTERFERENCE WITH KNOWN OBSTRUCTIONS OR OTHER UTILITIES WHICH ARE SHOWN ON THE PLANS UNLESS OTHERWISE DIRECTED BY THE ENGINEER.

17. IF RETURNING TO TRAFFIC OPERATIONS. IMMEDIATELY AFTER THE COMPLETION OF BACKFILLING, A THREE (3) INCH LAYER OF TEMPORARY ASPHALT PAVEMENT, THE MIX THEREOF APPROVED BY THE ENGINEER, SHALL BE PLACED AND ROLLED OVER THE BACKFILL.

18. CONTRACTOR SHALL RECONNECT ALL EXISTING SERVICES INCLUDING WATER SERVICE AND FIRE PROTECTION SERVICE CONNECTIONS FROM THE ABANDONED OR REPLACED WATER MAIN TO THE NEW WATER MAIN. THE CONTRACTOR SHALL ALSO PROVIDE ALL REQUIRED TEES, FITTINGS, PIPE AND RESTRAINED JOINT CONNECTIONS REQUIRED TO RECONNECT ALL SERVICES CONNECTIONS TO THE NEW WATER MAIN PER CITY OF SANTA MONICA STANDARDS, SOME WATER AND FIRE SERVICE CONNECTIONS ON NORTH SIDE COLORADO AVE HAVE NOT BEEN SHOWN IN DETAIL FOR PLAN CLARITY.

CONSTRUCTION NOTES (CONTINUED)

19. ALL SANITARY SEWER LATERALS THAT ARE FOUND IN CONFLICT WITH THE PROPOSED PIPELINE SHALL BE RECONSTRUCTED AND RECONNECTED WITH MINIMUM DISRUPTION OF SEWER SERVICE. THE CONTRACTOR SHALL CONTACT PUBLIC WORKS - ENGINEERING DIVISION FOR SPECIAL INSPECTION BEFORE PERFORMING SUCH WORK.

20. ALL WATER MAIN SEPARATIONS SHALL COMPLY WITH CALIFORNIA DEPARTMENT OF PUBLIC HEALTH GUIDANCE MEMO NO. 2003-02: GUIDANCE CRITERIA FOR THE SEPARATION OF WATER MAINS AND NON-POTABLE PIPELINES (OCTOBER 16, 2003 REVISION). UNLESS OTHERWISE NOTED ON PLANS, A MINIMUM OF 4'-0" CLEARANCE BETWEEN SANITARY SEWER AND WATER LINES RUNNING IN PARALLEL IS MAINTAINED THROUGHOUT PROJECT.

21. EXACT LOCATIONS, MATERIALS AND SIZE OF WATER SERVICES SHALL BE FIELD VERIFIED. ANY MATERIALS AND SIZES DEVIATING FROM PLANS SHALL BE CONVEYED TO THE ENGINEER IN WRITING.

22. ALL MECHANICAL JOINT GATE VALVES TO BE RESTRAINED WITH MECHANICAL JOINT RESTRAINTS.

23. ALL NEW AND EXISTING WATER MAINS SHALL BE PROPERLY RESTRAINED BY THE CONTRACTOR.

24. NO MECHANICAL EQUIPMENT IS PERMITED TO OPERATE WITHIN THREE FEET OF A GAS LINE AND ANY CLOSER WORK MUST BE DONE BY HAND.

25. ALL WATER MAINS SHALL BE PROPERLY RESTRAINED BY THE CONTRACTOR DURING ALL HYDROSTATIC TESTING.

26. ALL BLOW OFF VALVES SHALL BE INSTALLED PER CITY OF SANTA MONICA STD. DETAIL SMW 23.

27. ALL GATE VALVES SHALL BE INSTALLED PER CITY OF SANTA MONICA STD. DETAILS SMW 3, 12, 13, AND 15.

28. FOR WATER PIPE BEDDING DETAILS, REFER TO CITY OF SANTA MONICA STANDARD DRAWING SMW 1. ADDITIONALLY, STANDARD DRAWING SMW 1 WILL BE USED FOR TRENCHING STEEL PIPES.

29. ALL FERROUS METAL NOT PROTECTED BY ANODES SHALL BE ENCASED IN POLYETHYLENE WRAP, AS NOTED IN SPECS.

30. ALL WATER MAIN SHALL BE C-905 PVC (DR-14) FOR DIAMETERS GREATER THAN OR EQUAL TO 14". FOR DIAMETERS 4"-12", WATER MAIN SHALL BE C-900 PVC (DR-14).

31. MAXIMUM DESIGN DEFLECTION FOR ALL DIP MECHANICAL JOINTS IS 2.5°.

32. ALL EXISTING "TO BE RE-CONNECTED OR RELOCATED" FIRE HYDRANTS AND BURY ARE TO BE SWAPPED OUT, SALVAGED AND RETURNED TO THE CITY BY THE CONTRACTOR. IN RETURN, THE CITY WILL PROVIDE REFURBISHED FIRE HYDRANTS FOR INSTALLATION AT LOCATIONS AS SPECIFIED ON THE PLANS.

33. PROPOSED PIPE SIZES ARE BASED ON CITY OF SANTA MONICA BETTERMENT REQUEST AND NOT A RESULT OF ANY HYDRAULIC ANALYSIS OF THE PIPE SYSTEM.

34. DESIGN BASED ON METRO ACCEPTANCE OF "METRO RAIL DESIGN CITERIA" DEVIATION REQUESTS.

All field changes must be submitted to the City and reviewed and approved by the City Engineer prior to work continuance.

SYMBOL LEGEND

- EXIST GATE VALVE
- EXIST FIRE HYDRANT
- GATE VALVE
- FIRE HYDRANT
- BEND (HORIZ OR ROLL)
- BEND (VERT)
- TEE
- REDUCER
- COUPLING
- CAP
- BLOW-OFF ASSEMBLY
- AIR/VACUUM RELEASE
- METER BOX
- THRUST BLOCK

ABBREVIATIONS

ABAN	TO BE ABANDONED
ABND	ABANDONED (EXISTING)
ACP	ASBESTOS CEMENT PIPE
AR	AIR/VACUUM RELEASE
CB	CATCH BASIN
CIP	CAST IRON PIPE
℄	CENTER LINE
C/S	COMMUNICATION/SYSTEMS
CSC	CONCRETE STEEL CYLINDER
CPLG	COUPLING
DCL&C	DOUBLE CEMENT MORTAR LINED AND COATED
DIP	DUCTILE IRON PIPE
E	EAST
EA	EACH
ELEC	ELECTRICAL
EX	EXISTING
FH	FIRE HYDRANT
FO	FIBER OPTICS
FE	FLANGED END
FLX	FLEXIBLE
G	GAS LINE
GV	GATE VALVE
GCPTS	GALVANIC CATHODIC PROTECTION TEST STATION
HDPE	HIGH DENSITY POLYURETHANE
HORIZ	HORIZONTAL
INS JOINT	INSULATION JOINT
INV	INVERT
LF	LINEAR FOOT
LS	LUMP SUM
LT	LEFT
MJ	MECHANICAL JOINT
PE	PLAIN END
PP	POWER POLE
PRE-ASSD	PRE-ASSEMBLED
PROP	PROPOSED
PVC	POLYVINYL CHLORIDE
QTY	QUANTITY
RCP	REINFORCED CONCRETE PIPE
ROLL	ROLLED (BEND)
RJ	RESTRAINED JOINT
RT	RIGHT
RW	RECLAIMED WATER
R/W	RIGHT OF WAY
SCE	SOUTHERN CALIFORNIA EDISON
SD	STORM DRAIN
SDMH	STORM DRAIN MANHOLE
SM	CITY OF SANTA MONICA
SS	SANITARY SEWER
STA	STATION
STD	STANDARD
STL	STEEL
T	TELEPHONE
T/R	TOP OF RAIL
TRANS	TRANSITION
UD	UNDERDRAIN
VERT	VERTICAL
W	WATER MAIN, WEST
WM	WATER METER
WS	WATER SERVICE
WV	WATER VALVE

SRJV
FEB 20 2013
ISSUED FOR CONSTRUCTION

REV	DATE	BY	APP	REG NO	EXPIRES	SEAL HOLDER	DESCRIPTION
0	11/21/12	KY	RG	C74831	12/31/13	RAFAEL GONZALEZ	APPROVED FOR CONSTRUCTION

DESIGNED BY K. YAMAKAWA
DRAWN BY K. YAMAKAWA
CHECKED BY R. GONZALEZ
IN CHARGE R. GONZALEZ
DATE 11/21/12

REGISTERED PROFESSIONAL ENGINEER RAFAEL GONZALEZ No. C74831 Exp. 12-31-13 CIVIL STATE OF CALIFORNIA

Exposition Metro Line Construction Authority
Expo
Exposition Construction Authority Approved for Construction Drawings - AFC
PARSONS BRINCKERHOFF FEB 19 2013

EXPO SKANSKA RADOS
444 South Flower Street
Suite 2200
Los Angeles. CA 90071
TEL (213) 443-7463
FAX (213) 362-9481

EXPOSITION LRT PROJECT- PHASE 2
WATER RELOCATION
CONSTRUCTION NOTES

CONTRACT NO XP8902-002
DRAWING NO UW-3C-102 REV 0
SCALE NO SCALE
SHEET NO 52 OF 108

SCALES HORIZ SCALE: VERT SCALE: SHEET INDEX NUMBER

CURRENT STATUS

gonzalezr 4:01:28 PM 11/21/2012
Plot Driver=EXPO2-Half-BW-pdf.plt Pentable=EXPO2-PENTABLE.tbl
C:\EXPO2\Batch Plot\3C\expo2-UW-3C-102.plg

REVISION DATES (DESIGN STAGE ONLY)
Sheet Version 2.01

CITY DRAWING NO. U9211
SHEET NO.: 52 OF 108
REFERENCE : DATE : 20__
SUBMITTED BY: DATE : 20__
APPROVED BY: LEON E. SWAIN, P.E., CITY ENGINEER DATE 1-15 2013
REVIEWED : DATE 1-15 2013
CITY ENGINEERING
NO. | DATE | BY | DESCRIPTION | APPROVED — REVISIONS

City of Santa Monica
Department of Public Works
1437 4th Street, Suite 300 Santa Monica, CA 90401
TEL. (310)458-8721 FAX. (310)393-4425
e-mail : smengineering@smgov.net

C:\EXPO2\Batch Plot\3C\expo2-UW-3C-102.plg
11/21/2012
Plotted by: gonzalezr

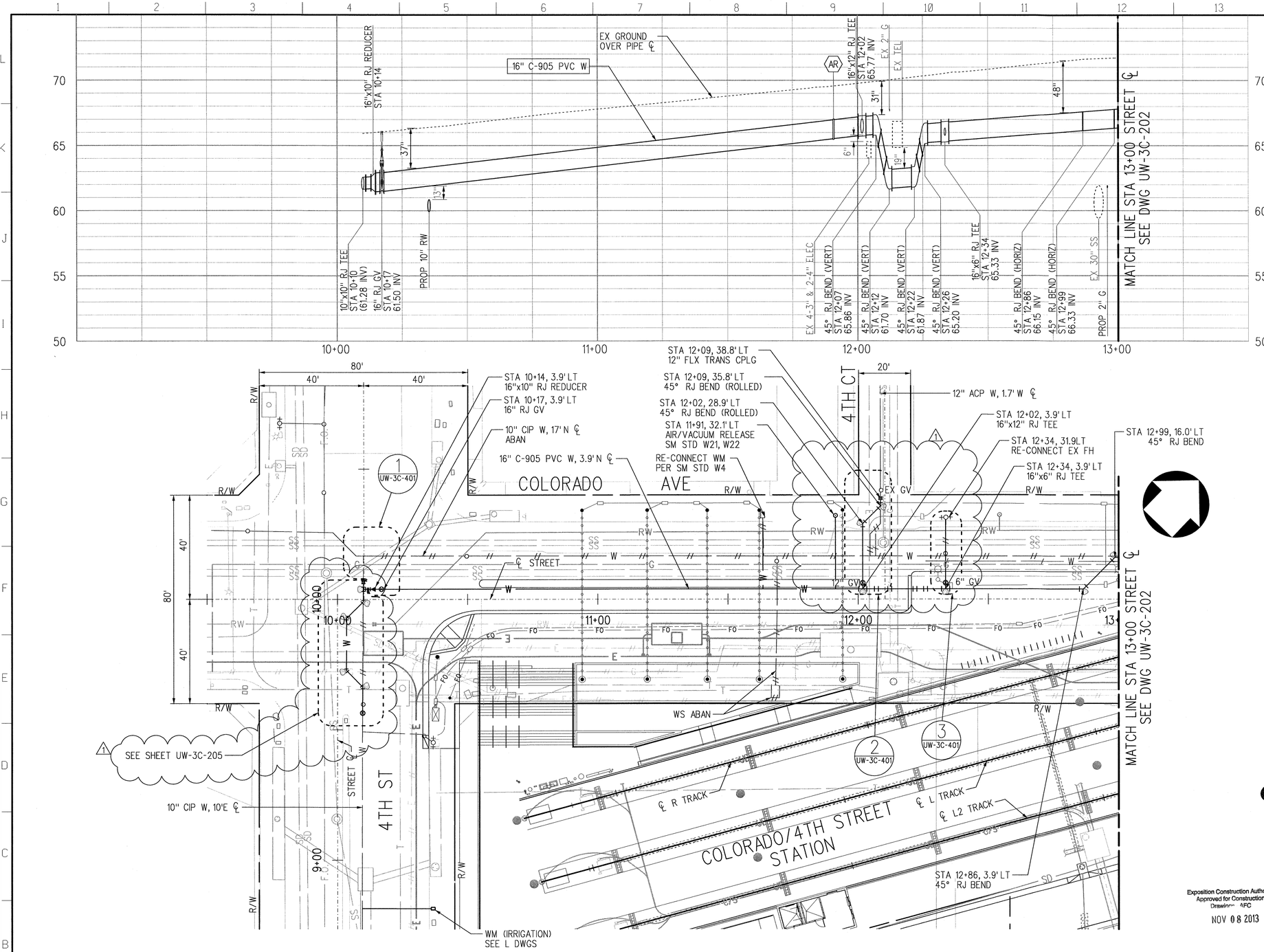

SRJV
NOV 08 2013
ISSUED FOR CONSTRUCTION

Exposition Construction Authority
Approved for Construction
Drawing: AFC
NOV 08 2013

VERTICAL GRAPHIC SCALE 4' 0 4' 8'
HORIZONTAL GRAPHIC SCALE 20' 10' 0 20' 40'

REV	DATE	BY	APP	REG NO	EXPIRES	SEAL HOLDER	DESCRIPTION
1	5/9/13	KY	PWT	C43086	3/31/14	PETER W. TUCCILLO	ECI 12
0	11/21/12	KY	RG	C74831	12/31/13	RAFAEL GONZALEZ	APPROVED FOR CONSTRUCTION

DESIGNED BY K. YAMAKAWA
DRAWN BY K. YAMAKAWA
CHECKED BY R. GONZALEZ
IN CHARGE P. TUCCILLO
DATE 11/21/12

REGISTERED PROFESSIONAL ENGINEER PETER W. TUCCILLO No. C43086 Exp. 03-31-14 CIVIL STATE OF CALIFORNIA

Exposition Metro Line Construction Authority
Expo
EXPO SKANSKA RADOS
444 South Flower Street
Suite 2200
Los Angeles, CA 90071
TEL (213) 443-7463
FAX (213) 362-9481
PARSONS BRINCKERHOFF
CURRENT STATUS

EXPOSITION LRT PROJECT- PHASE 2
WATER RELOCATION
COLORADO AVE
PLAN & PROFILE
STA 9+50 TO STA 13+00

CONTRACT NO XP8902-002
DRAWING NO UW-3C-201 REV 1
SCALE HOR: 1"=20' VERT: 1"=4'
SHEET NO 53 OF 108

Yamakawa 6:58:48 AM 5/10/2013
Plot Driver=EXPO2-PDF-Full-BW.plt
Pentable=EXPO2-PENTABLE.tbl
c:\projectwise\pb\projectwiseint\kyamakawa\dms09108\expo2-UW-3C-201.plg

SCALES HORIZ SCALE: 1"=20' VERT SCALE: 1"=4'
SHEET
INDEX NUMBER

REVISION DATES (DESIGN STAGE ONLY)

Sheet Version 2.01

CITY DRAWING NO. U9211
SHEET NO. 53 OF 108
DATE: 10-28-2013
APPROVED BY: LEON E. SHAW, P.E., CITY ENGINEER
ENGINEERING

REFERENCE:
SUBMITTED BY:
REVIEWED: DATE: 20
REVIEWED: DATE: 10-28-2013
REVIEWED: DATE: 10-28-2013
CITY

REVISIONS
NO. DATE BY DESCRIPTION
APPROVED

City of Santa Monica
Department of Public Works
1437 4th Street, Suite 300 Santa Monica, CA 90401
TEL. (310)458-8721 FAX. (310)393-4425
e-mail: smengineering@smgov.net

Plotted by: Yamakawa 5/10/2013
c:\projectwise\pb\projectwiseint\kyamakawa\dms09108\expo2-UW-3C-201.plg

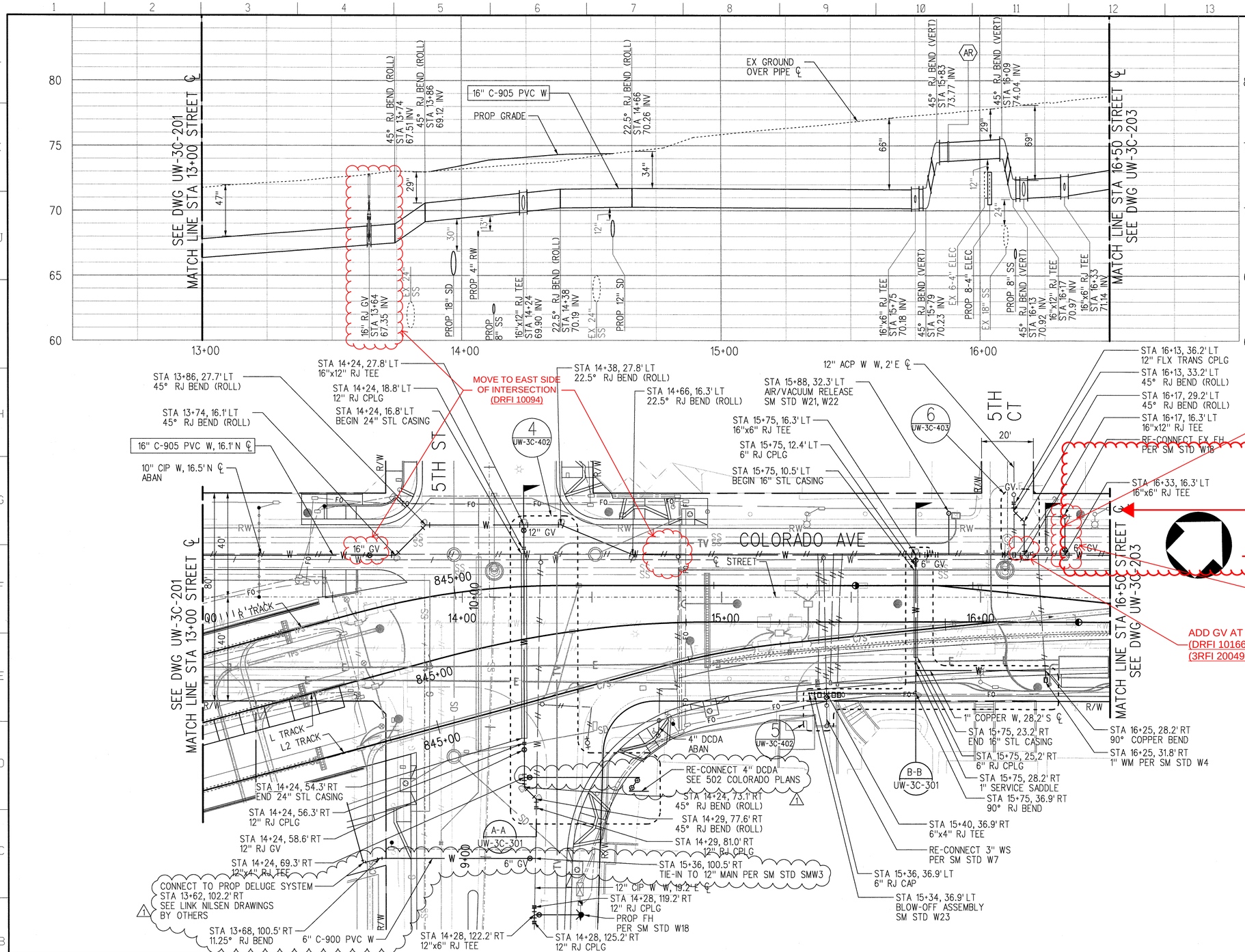

CONTRACTOR TO PROVIDE JOINT RESTRAINTS FROM 45 DEGREE BEND AT 14+66 TO EASTERLY. PLEASE SUBMIT TYPE OF RESTRAINT TO BE USED FOR CITY APPROVAL PRIOR TO CONSTRUCTION.
(DRFI 10165)
(3RFI 20048)

SRJV
APR 24 2014
ISSUED FOR CONSTRUCTION

Exposition Construction Authority
Approved for Construction
Drawings - AFC
APR 24 2014

VERTICAL GRAPHIC SCALE 4' 0 4' 8'
HORIZONTAL GRAPHIC SCALE 20' 10' 0 20' 40'

REV	DATE	BY	APP	REG NO	EXPIRES	SEAL HOLDER	DESCRIPTION
1	4/3/14	KY	PWT	C43086	3/31/14	PETER W. TUCCILLO	ECI43
0	12/7/12	KY	RG	C74831	12/31/13	RAFAEL GONZALEZ	APPROVED FOR CONSTRUCTION

REVISION DATES (DESIGN STAGE ONLY)

DESIGNED BY K. YAMAKAWA
DRAWN BY K. YAMAKAWA
CHECKED BY R. GONZALEZ
IN CHARGE R. GONZALEZ
DATE 12/7/12

REGISTERED PROFESSIONAL ENGINEER PETER W. TUCCILLO No. C43086 Exp. 03-31-16 CIVIL STATE OF CALIFORNIA

Exposition Metro Line Construction Authority
Expo
EXPO SKANSKA RADOS
444 South Flower Street Suite 2200 Los Angeles, CA 90071
TEL (213) 443-7463 FAX (213) 362-9481
PARSONS BRINCKERHOFF
CURRENT STATUS

EXPOSITION LRT PROJECT- PHASE 2
WATER RELOCATION
COLORADO AVE
PLAN & PROFILE
STA 13+00 TO STA 16+50

CONTRACT NO XP8902-002
DRAWING NO UW-3C-202 REV 1
SCALE HOR: 1"=20' VERT: 1"=4'
SHEET NO 54 OF 108

Yamakawa 3:33:05 PM 4/3/2014
Plot Driver=EXPO2-PDF-Full-BW.plt Pentable=EXPO2-PENTABLE.tbl c:\projectwise\pb\projectwiseint\kyamakawa\dms09108\expo2-UW-3C-202.plg

SCALES HORIZ SCALE: 1"=20' VERT SCALE: 1"=4' | SHEET | INDEX NUMBER

Sheet Version 2.01

CITY DRAWING NO. U9211
SHEET NO. 54 OF 108
DATE: 4/16 2014
REFERENCE:
SUBMITTED BY:
APPROVED BY: LEON E. SWAIN, P.E., CITY ENGINEER
REVIEWED: DATE: 4/16 2014
REVIEWED: DATE: 4/16 2014
REVIEWED: DATE: 20__
CITY APPROVED

NO.	DATE	BY	DESCRIPTION
REVISIONS			

City of Santa Monica
Department of Public Works
1437 4th Street, Suite 300 Santa Monica, CA 90401
TEL. (310)458-8721 FAX. (310)393-4425
e-mail : smengineering@smgov.net

Plotted by: Yamakawa 4/3/2014 c:\projectwise\pb\projectwiseint\kyamakawa\dms09108\expo2-UW-3C-202.plg

(DRFI 10165)
(3RFI 20048)

Contractor to provide joint restraints in this entire stretch. Please submit type of restraint to be used for City approval prior to construction.

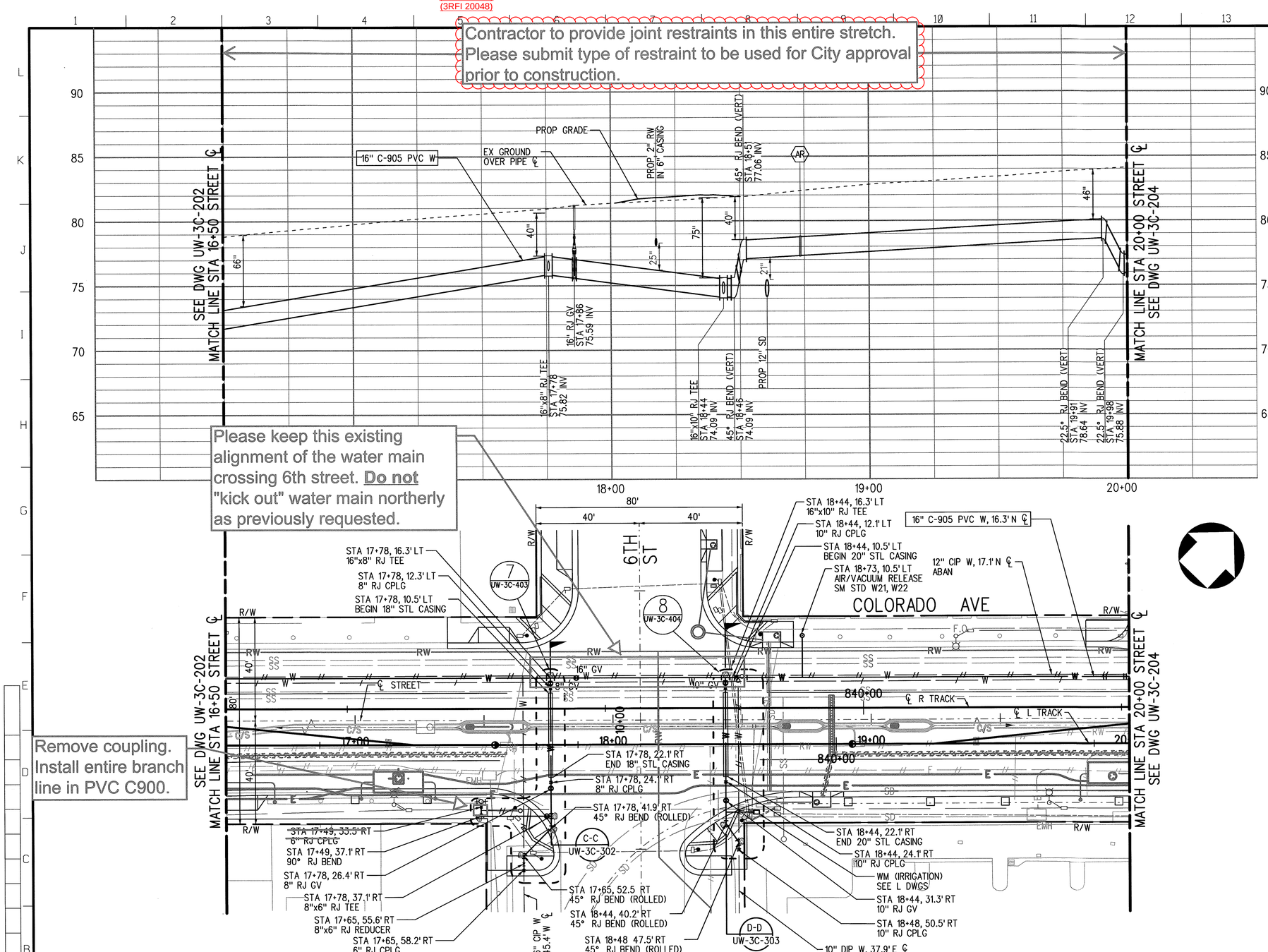

Please keep this existing alignment of the water main crossing 6th street. **Do not** "kick out" water main northerly as previously requested.

Remove coupling. Install entire branch line in PVC C900.

SRJV
MAR 08 2013
ISSUED FOR CONSTRUCTION

4' 0 4' 8'
VERTICAL GRAPHIC SCALE
20' 10' 0 20' 40'
HORIZONTAL GRAPHIC SCALE

REV	DATE	BY	APP	REG NO	EXPIRES	SEAL HOLDER	DESCRIPTION
0	11/21/12	KY	RG	C74831	12/31/13	RAFAEL GONZALEZ	APPROVED FOR CONSTRUCTION

DESIGNED BY K. YAMAKAWA
DRAWN BY K. YAMAKAWA
CHECKED BY R. GONZALEZ
IN CHARGE R. GONZALEZ
DATE 11/21/12

REGISTERED PROFESSIONAL ENGINEER RAFAEL GONZALEZ No. C74831 Exp. 12-31-13 CIVIL STATE OF CALIFORNIA

Exposition Metro Line Construction Authority
Expo
EXPO SKANSKA RADOS
444 South Flower Street Suite 2200 Los Angeles, CA 90071
TEL (213) 443-7463 FAX (213) 362-9481
PARSONS BRINCKERHOFF

Exposition Construction Authority Approved for Construction Drawings - AFC
MAR 07 2013

EXPOSITION LRT PROJECT- PHASE 2
WATER RELOCATION
COLORADO AVE
PLAN & PROFILE
STA 16+50 TO STA 20+00

CONTRACT NO XP8902-002
DRAWING NO UW-3C-203 REV 0
SCALE HOR: 1"=20' VERT: 1"=4'
SHEET NO 55 OF 108

SCALES: HORIZ SCALE: 1"=20' VERT SCALE: 1"=4'
SHEET
INDEX NUMBER

gonzalezr 4:01:38 PM 11/21/2012
Plot Driver=EXPO2-Half-BW-pdf.plt Pentable=EXPO2-PENTABLE.tbl
C:\EXPO2\Batch Plot\3C\expo2-UW-3C-203.plg

CURRENT STATUS

City of Santa Monica
Department of Public Works
1437 4th Street, Suite 300 Santa Monica, CA 90401
TEL. (310)458-8721 FAX. (310)393-4425
e-mail : smengineering@smgov.net

CITY DRAWING NO. U9211
SHEET NO.: 55 OF 108
DATE: 2-28-13
SUBMITTED BY:
APPROVED BY: LEON E. SWAN, P.E., CITY ENGINEER
ENGINEERING
REFERENCE:
REVIEWED: DATE: 20__
REVISIONS: NO. DATE BY DESCRIPTION
APPROVED
CITY

Plotted by: gonzalezr 11/21/2012 C:\EXPO2\Batch Plot\3C\expo2-UW-3C-203.plg

Sheet Version 2.01

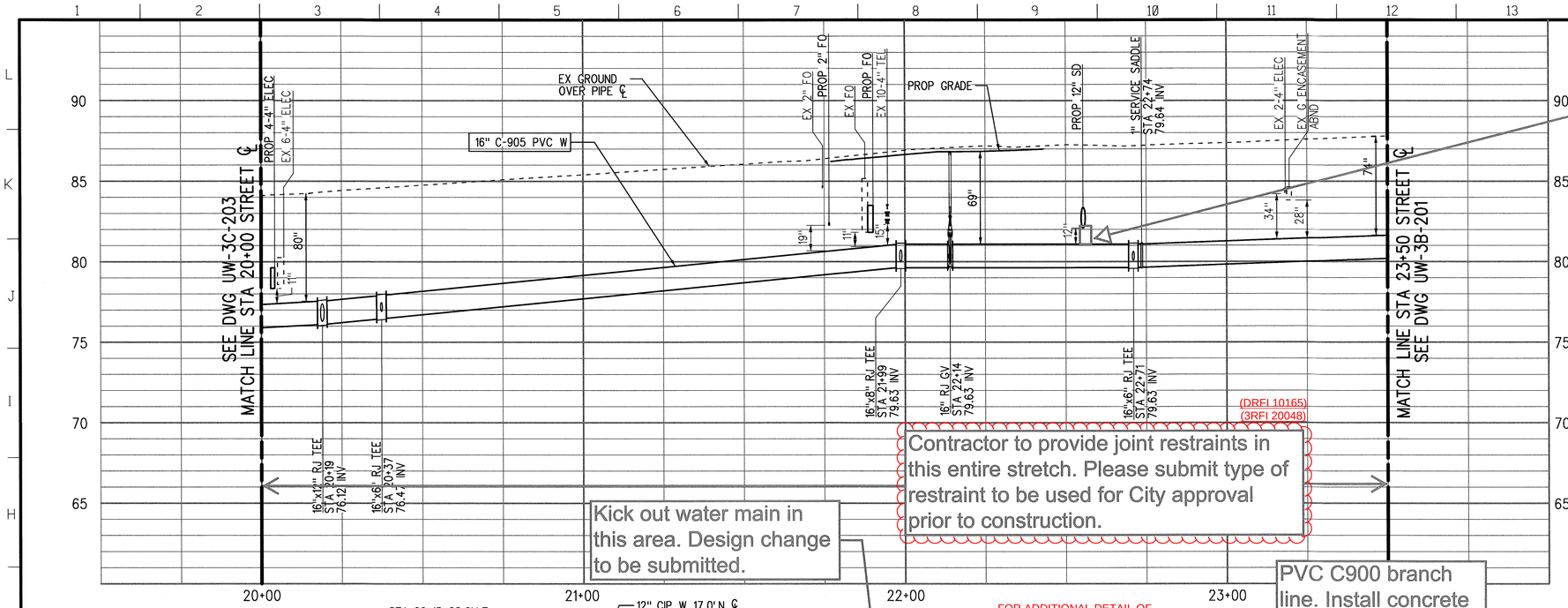

No water joints within 10' on each side of SD (if separation under 12"). Field verify.

(DRFI 10165)
(3RFI 20048)

Contractor to provide joint restraints in this entire stretch. Please submit type of restraint to be used for City approval prior to construction.

Kick out water main in this area. Design change to be submitted.

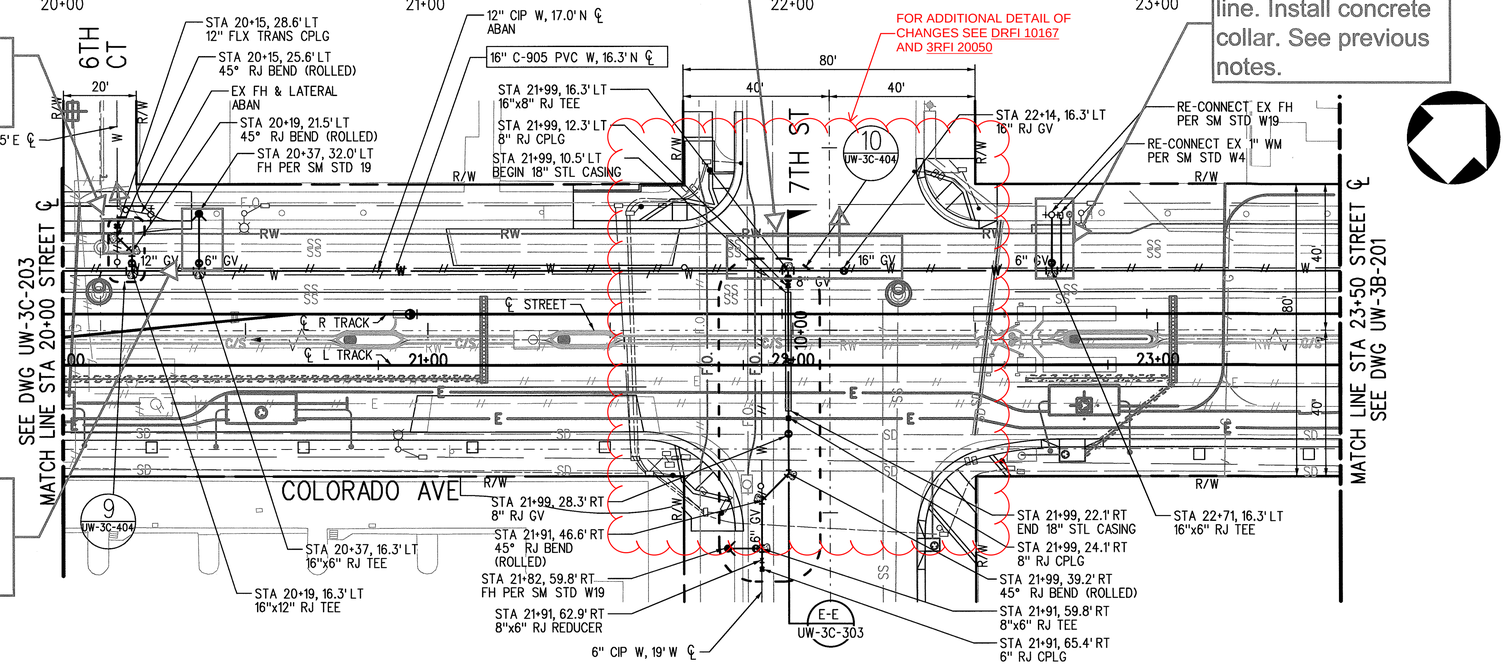

FOR ADDITIONAL DETAIL OF CHANGES SEE DRFI 10167 AND 3RFI 20050

Tie-in water north of newly installed reclaimed water.

PVC C900 branch line. Install concrete collar. See previous notes.

PVC C900 branch line. Install concrete collar. See previous notes.

SRJV
MAR 08 2013
ISSUED FOR CONSTRUCTION

VERTICAL GRAPHIC SCALE 4' 0 4' 8'

HORIZONTAL GRAPHIC SCALE 20' 10' 0 20' 40'

REV	DATE	BY	APP	REG NO	EXPIRES	SEAL HOLDER	DESCRIPTION
0	11/21/12	KY	RG	C74831	12/31/13	RAFAEL GONZALEZ	APPROVED FOR CONSTRUCTION

DESIGNED BY K. YAMAKAWA
DRAWN BY K. YAMAKAWA
CHECKED BY R. GONZALEZ
IN CHARGE R. GONZALEZ
DATE 11/21/12

REGISTERED PROFESSIONAL ENGINEER — RAFAEL GONZALEZ — No. C74831 — Exp. 12-31-13 — CIVIL — STATE OF CALIFORNIA

Exposition Metro Line Construction Authority
Expo
EXPO SKANSKA RADOS
444 South Flower Street
Suite 2200
Los Angeles, CA 90071
TEL (213) 443-7463
FAX (213) 362-9481
PARSONS BRINCKERHOFF

EXPOSITION LRT PROJECT- PHASE 2
WATER RELOCATION
COLORADO AVE
PLAN & PROFILE
STA 20+00 TO STA 23+50

Exposition Construction Authority Approved for Construction Drawings - AFC
MAR 07 2013

CONTRACT NO XP8902-002
DRAWING NO UW-3C-204 REV 0
SCALE HOR: 1"=20' VERT: 1"=4'
SHEET NO 56 OF 108

SCALES HORIZ SCALE: 1"=20' VERT SCALE: 1"=4'
SHEET
INDEX NUMBER

City of Santa Monica
Department of Public Works
1437 4th Street, Suite 300 Santa Monica, CA 90401
TEL. (310)458-8721 FAX. (310)393-4425
e-mail : smengineering@smgov.net

CITY DRAWING NO. U9211
SHEET NO. 56 OF 108
DATE : 2-28 2013
APPROVED BY: LEON E. SWAIN, P.E., CITY ENGINEER
SUBMITTED BY:
REFERENCE :
REVIEWED : DATE : 20
CITY ENGINEERING
REVISIONS — NO. DATE BY DESCRIPTION — APPROVED

gonzalezr 4:01:40 PM 11/21/2012
Plot Driver=EXPO2-Half-BW-pdf.plt
Pentable=EXPO2-PENTABLE.tbl
C:\EXPO2\Batch Plot\3C\expo2-UW-3C-204.plg
Plotted by: gonzalezr 11/21/2012
C:\EXPO2\Batch Plot\3C\expo2-UW-3C-204.plg
Sheet Version 2.01
CURRENT STATUS

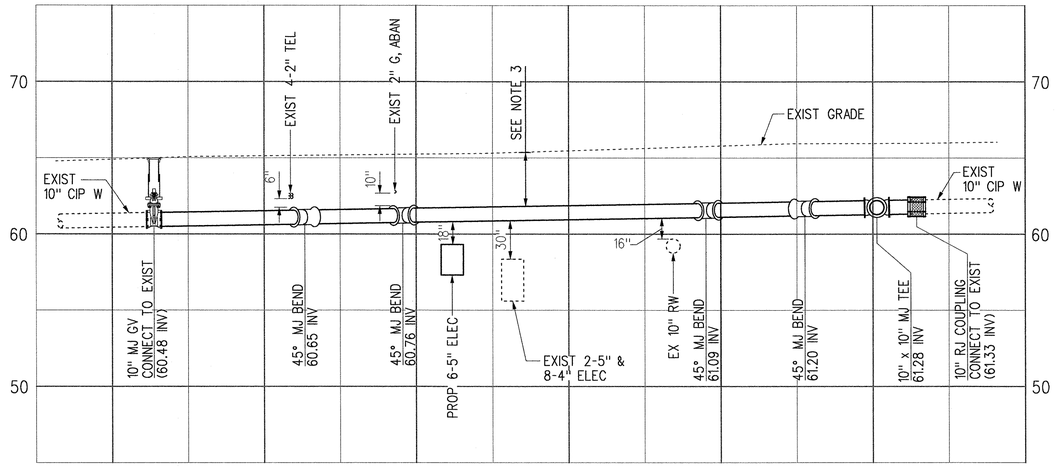

PROFILE

1" = 5'

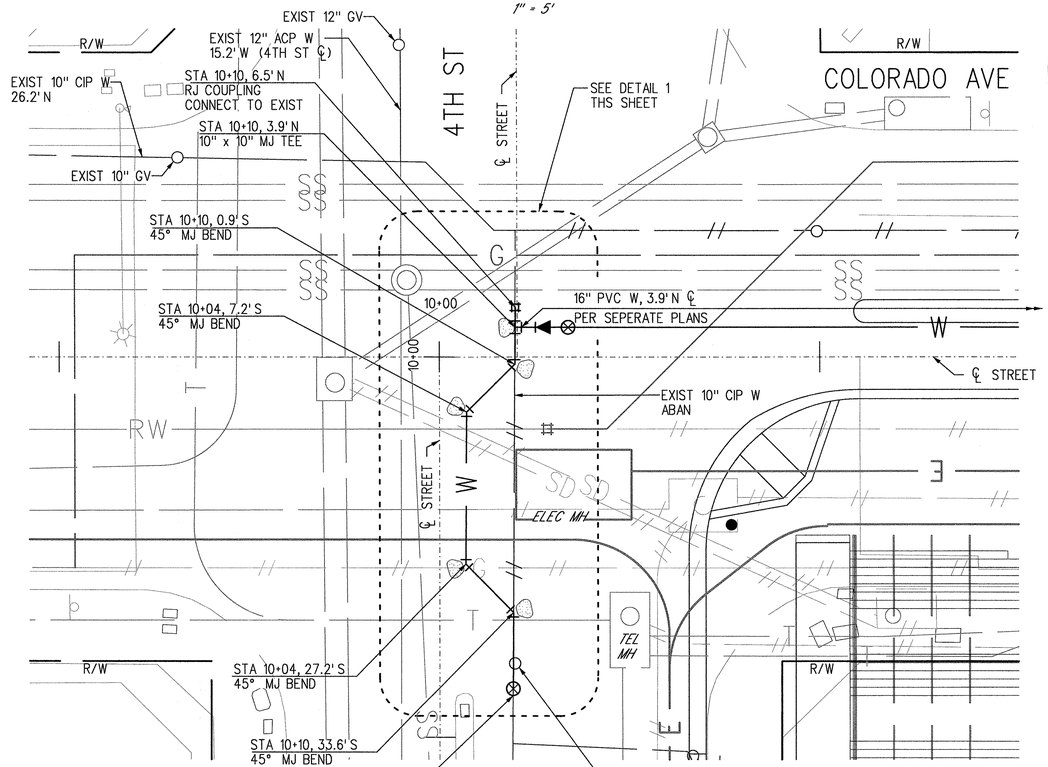

PLAN

1" = 10'

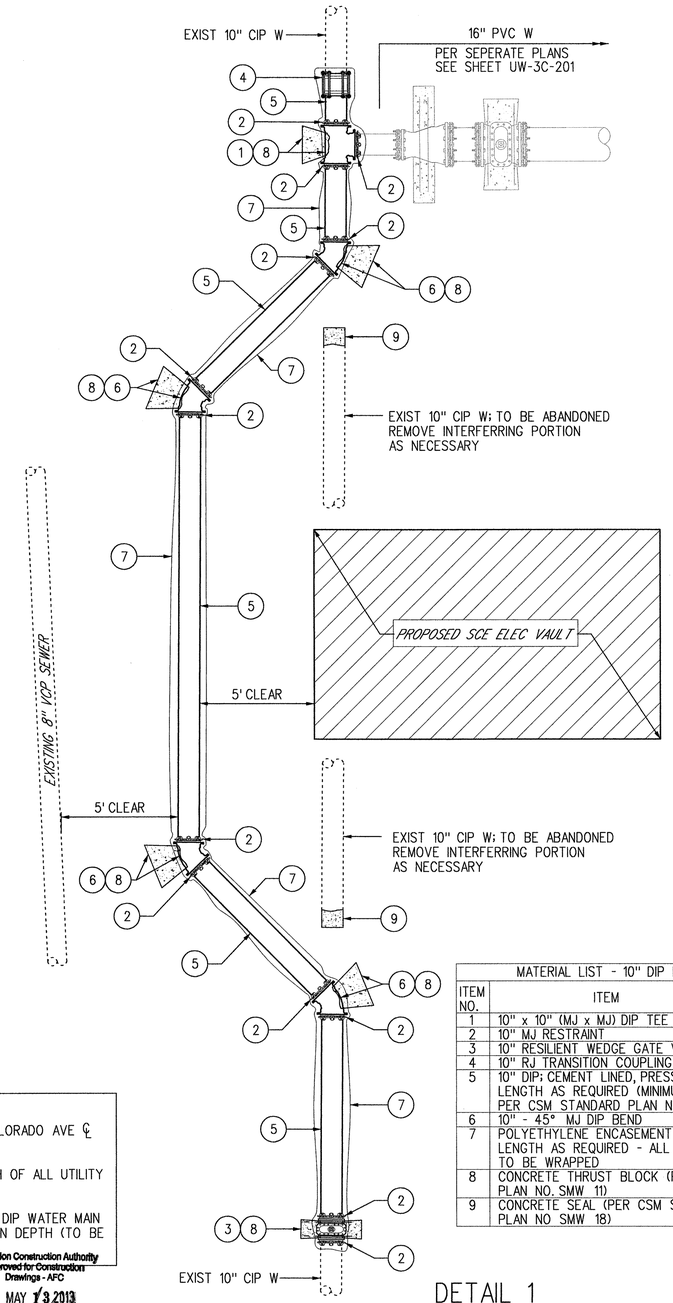

DETAIL 1

NOT TO SCALE

MATERIAL LIST - 10" DIP RELOCATION AT 4TH ST			
ITEM NO.	ITEM	UNIT	QTY
1	10" x 10" (MJ x MJ) DIP TEE	EA	1
2	10" MJ RESTRAINT	EA	13
3	10" RESILIENT WEDGE GATE VALVE (MJ x MJ)	EA	1
4	10" RJ TRANSITION COUPLING (CIP x DIP)	EA	1
5	10" DIP; CEMENT LINED, PRESSURE CLASS 350 PSI LENGTH AS REQUIRED (MINIMUM LENGTH= 24") PER CSM STANDARD PLAN NO SMW 1	EA	6
6	10" - 45° MJ DIP BEND	EA	4
7	POLYETHYLENE ENCASEMENT (PER AWWA 105); LENGTH AS REQUIRED - ALL PIPE AND FITTINGS TO BE WRAPPED	LS	1
8	CONCRETE THRUST BLOCK (PER CSM STANDARD PLAN NO. SMW 11)	EA	6
9	CONCRETE SEAL (PER CSM STANDARD PLAN NO SMW 18)	EA	2

NOTES:

1. STATIONING AND OFFSETS PER COLORADO AVE ℄ UNLESS SPECIFIED OTHERWISE.
2. CONTRACTOR SHALL VERIFY DEPTH OF ALL UTILITY CROSSINGS
3. DEPTH OF COVER FOR PROPOSED DIP WATER MAIN SHALL MATCH EXISTING WATER MAIN DEPTH (TO BE FIELD VERIFIED)

Exposition Construction Authority Approved for Construction Drawings - AFC
MAY 13 2013

SRJV MAY 14 2013 ISSUED FOR CONSTRUCTION

REV	DATE	BY	APP	REG NO	EXPIRES	SEAL HOLDER	DESCRIPTION
0	5/9/13	KY	PWT	C43086	3/31/14	PETER W. TUCCILLO	ECI 12

REVISION DATES (DESIGN STAGE ONLY)

DESIGNED BY K. YAMAKAWA
DRAWN BY K. YAMAKAWA
CHECKED BY P. TUCCILLO
IN CHARGE P. TUCCILLO
DATE 5/9/13

REGISTERED PROFESSIONAL ENGINEER PETER W. TUCCILLO No. C43086 Exp. 03-31-14 CIVIL STATE OF CALIFORNIA

Exposition Metro Line Construction Authority
Expo
EXPO SKANSKA RADOS
444 South Flower Street
Suite 2200
Los Angeles, CA 90071
TEL (213) 443-7463
FAX (213) 362-9481
PARSONS BRINCKERHOFF
CURRENT STATUS

EXPOSITION LRT PROJECT- PHASE 2
DESIGN EXHIBIT
4TH STREET WATER RELOCATION FOR PROPOSED SCE

CONTRACT NO XP8902-002
DRAWING NO UW-3C-205 REV 0
SCALE AS SHOWN
SHEET NO 56A OF 108

SCALES HORIZ SCALE: VERT SCALE:
SHEET
INDEX NUMBER

Yamakawa 2:41:50 PM 5/9/2013
Plot Driver=EXPO2-PDF-Full-BW.plt Pentable=EXPO2-PENTABLE.tbl c:\projectwise\pb\projectwiseint\kyamakawa\dms09108\expo2-UW-3C-205.plg

Sheet Version 2.01

REFERENCE: SUBMITTED BY: CITY DRAWING NO. SHEET NO: OF
APPROVED BY: LEON E. SWAIN, P.E., CITY ENGINEER DATE: 05-09 20 13
REVIEWED: DATE: 20 REVIEWED: DATE: 20 REVIEWED: DATE: 20 REVIEWED: DATE: 20
CITY ENGINEERING

NO.	DATE	BY	DESCRIPTION
			REVISIONS

APPROVED

City of Santa Monica
Department of Public Works
1437 4th Street, Suite 300 Santa Monica, CA 90401
TEL. (310)458-8721 FAX. (310)393-4425
e-mail : smengineering@smgov.net

Plotted by: Yamakawa 5/9/2013 c:\projectwise\pb\projectwiseint\kyamakawa\dms09108\expo2-UW-3C-205.plg

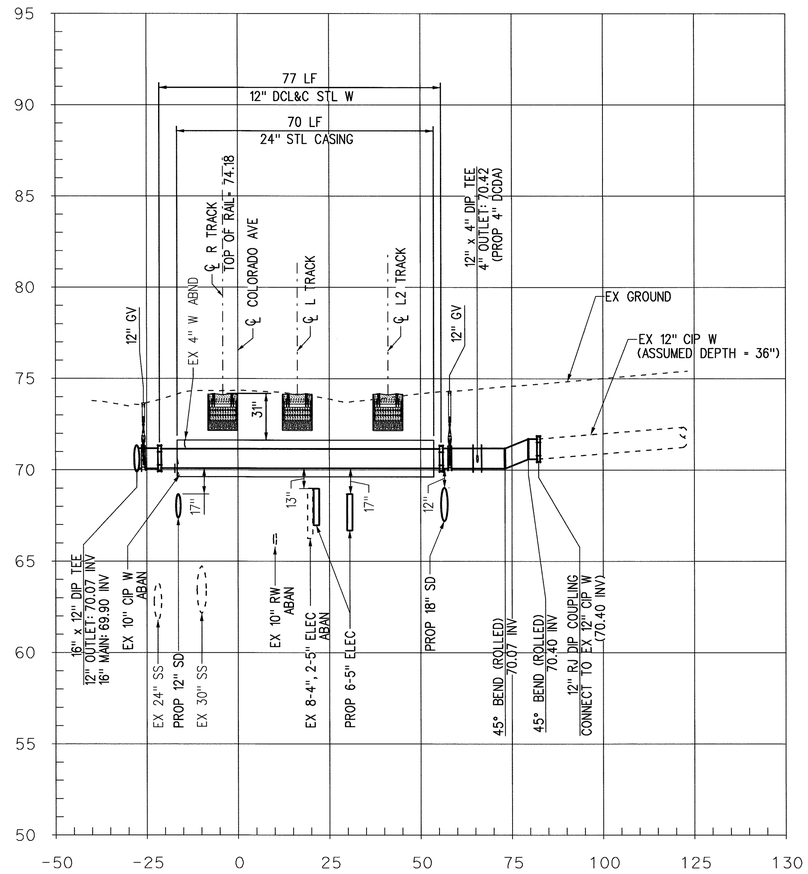

CROSS-SECTION @ 5TH ST
STA 14+24

HOR: 1" = 20'
VER: 1" = 4'

A-A
UW-3C-202

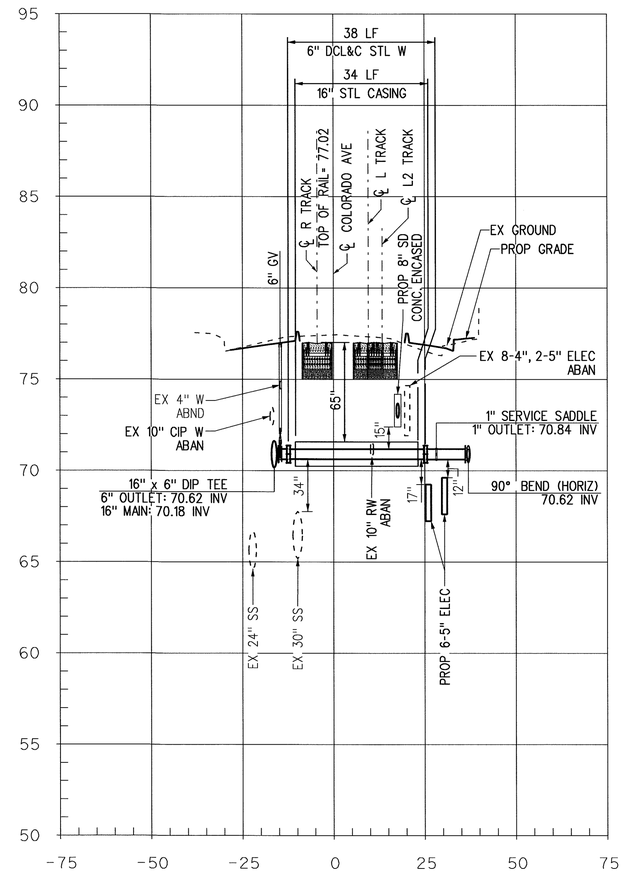

CROSS-SECTION @ 5TH CT
STA 15+68

HOR: 1" = 20'
VER: 1" = 4'

B-B
UW-3C-202

SRJV
MAR 08 2013
ISSUED FOR CONSTRUCTION

REV	DATE	BY	APP	REG NO	EXPIRES	SEAL HOLDER	DESCRIPTION
0	11/21/12	KY	RG	C74831	12/31/13	RAFAEL GONZALEZ	APPROVED FOR CONSTRUCTION

REVISION DATES (DESIGN STAGE ONLY)

DESIGNED BY K. YAMAKAWA
DRAWN BY K. YAMAKAWA
CHECKED BY R. GONZALEZ
IN CHARGE R. GONZALEZ
DATE 11/21/12

REGISTERED PROFESSIONAL ENGINEER — RAFAEL GONZALEZ — NO. C74831 — Exp. 12-31-13 — CIVIL — STATE OF CALIFORNIA

Exposition Metro Line Construction Authority
Expo
EXPO SKANSKA RADOS
444 South Flower Street
Suite 2200
Los Angeles, CA 90071
TEL (213) 443-7463
FAX (213) 362-9481
PARSONS BRINCKERHOFF

EXPOSITION LRT PROJECT- PHASE 2
WATER RELOCATION
CROSS SECTIONS
1 OF 3

Exposition Construction Authority
Approved for Construction
Drawings - AFC
MAR 07 2013

CONTRACT NO XP8902-002
DRAWING NO UW-3C-301 REV 0
SCALE HOR: 1"=20' VERT: 1"=4'
SHEET NO 57 OF 108

gonzalezr 4:01:41 PM 11/21/2012
Plot Driver=EXPO2-Half-BW-pdf.plt
Pentable=EXPO2-PENTABLE.tbl
C:\EXPO2\Batch Plot\3C\expo2-UW-3C-301.plg

SCALES: HORIZ SCALE: 1"=20' VERT SCALE: 1"=4'
SHEET
INDEX NUMBER

CURRENT STATUS

Sheet Version 2.01

REFERENCE :
SUBMITTED BY: Dwy de Vivo
APPROVED BY: LEON E. SWAIN, P.E., CITY ENGINEER
CITY DRAWING NO. U9211
SHEET NO. 57 OF 108
DATE : 2-28 20 13
ENGINEERING

REVIEWED : DATE : 20__
REVIEWED : DATE : 20__
REVIEWED : DATE : 20__
REVIEWED : DATE : 20__
APPROVED
CITY

NO.	DATE	BY	DESCRIPTION
			REVISIONS

City of Santa Monica
Department of Public Works
1437 4th Street, Suite 300 Santa Monica, CA 90401
TEL. (310)458-8721 FAX. (310)393-4425
e-mail : smengineering@smgov.net

Plotted by: gonzalezr 11/21/2012 C:\EXPO2\Batch Plot\3C\expo2-UW-3C-301.plg

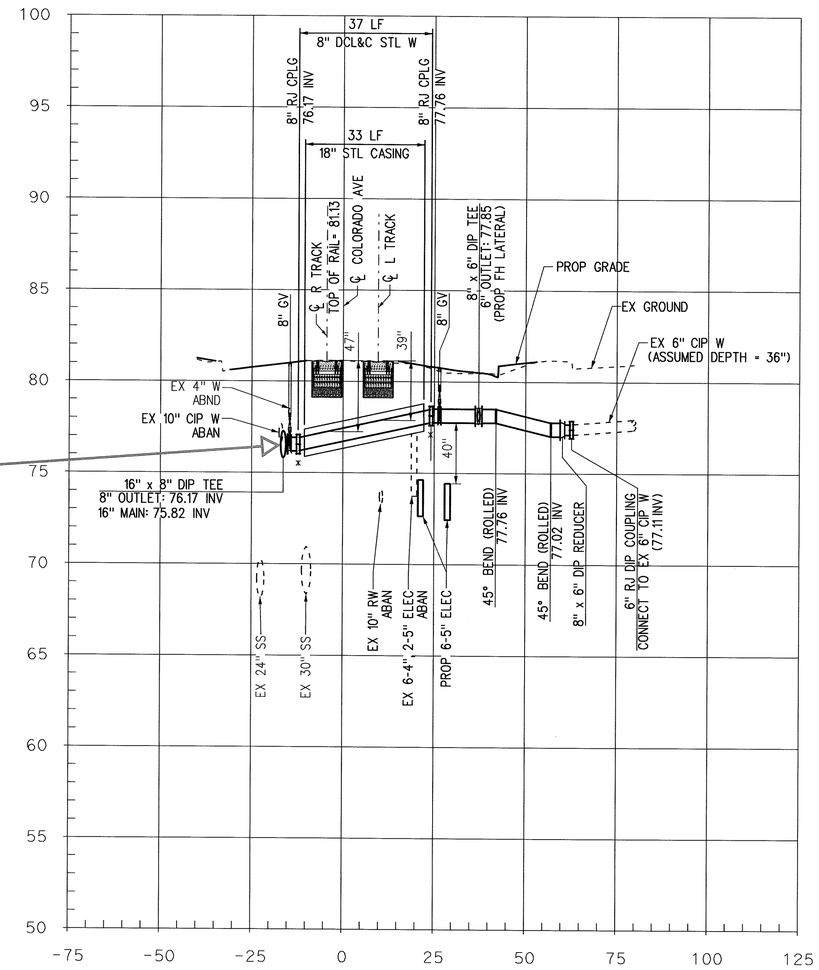

Please keep this existing alignment of the water main crossing 6th street. **Do not** "kick out" water main northerly as previously requested.

x *NOTE:*
PIPE DEFLECTION AT RJ COUPLING = 2.5°

CROSS-SECTION @ 6TH ST
STA 17+78

HOR: 1" = 20'
VER: 1" = 4'

C-C
UW-3C-203

SRJV
MAR 08 2013
ISSUED FOR CONSTRUCTION

REV	DATE	BY	APP	REG NO	EXPIRES	SEAL HOLDER	DESCRIPTION
0	11/21/12	KY	RG	C74831	12/31/13	RAFAEL GONZALEZ	APPROVED FOR CONSTRUCTION

DESIGNED BY K. YAMAKAWA
DRAWN BY K. YAMAKAWA
CHECKED BY R. GONZALEZ
IN CHARGE R. GONZALEZ
DATE 11/21/12

REGISTERED PROFESSIONAL ENGINEER — RAFAEL GONZALEZ No. C74831 Exp. 12-31-13 CIVIL — STATE OF CALIFORNIA

Exposition Metro Line Construction Authority
Expo
EXPO SKANSKA RADOS
444 South Flower Street
Suite 2200
Los Angeles, CA 90071
TEL (213) 443-7463
FAX (213) 362-9481
PARSONS BRINCKERHOFF

EXPOSITION LRT PROJECT- PHASE 2
WATER RELOCATION
CROSS SECTIONS
2 OF 3

Exposition Construction Authority
Approved for Construction
Drawings - AFC
MAR 07 2013

CONTRACT NO XP8902-002
DRAWING NO UW-3C-302 REV 0
SCALE HOR: 1"=20' VERT: 1"=4'
SHEET NO 58 OF 108

SCALES HORIZ SCALE: 1"=20' VERT SCALE: 1"=4'
SHEET
INDEX NUMBER

gonzalezr 4:01:41 PM 11/21/2012
Plot Driver=EXPO2-Half-BW-pdf.plt
Pentable=EXPO2-PENTABLE.tbl
C:\EXPO2\Batch Plot\3C\expo2-UW-3C-302.plg

CURRENT STATUS

REFERENCE:
SUBMITTED BY: Dwy de Vivie
CITY DRAWING NO. U9211
SHEET NO: 58 OF 108
DATE: 2-28 2013
APPROVED BY: LEON E. SWANN, P.E., CITY ENGINEER

REVIEWED: DATE: 20
REVIEWED: DATE: 20
REVIEWED: DATE: 20

REVISIONS
NO. DATE BY DESCRIPTION APPROVED

City of Santa Monica
Department of Public Works
1437 4th Street, Suite 300 Santa Monica, CA 90401
TEL. (310)458-8721 FAX. (310)393-4425
e-mail : srmengineering@smgov.net

Plotted by: gonzalezr 11/21/2012 C:\EXPO2\Batch Plot\3C\expo2-UW-3C-302.plg

REVISION DATES (DESIGN STAGE ONLY)

Sheet Version 2.01

ECI #00043 - PENDING

FOR ADDITIONAL DETAIL SEE DRFI 10167 AND 3RFI 20050

Please keep this existing alignment of the water main crossing 6th street. **Do not** "kick out" water main northerly as previously requested.

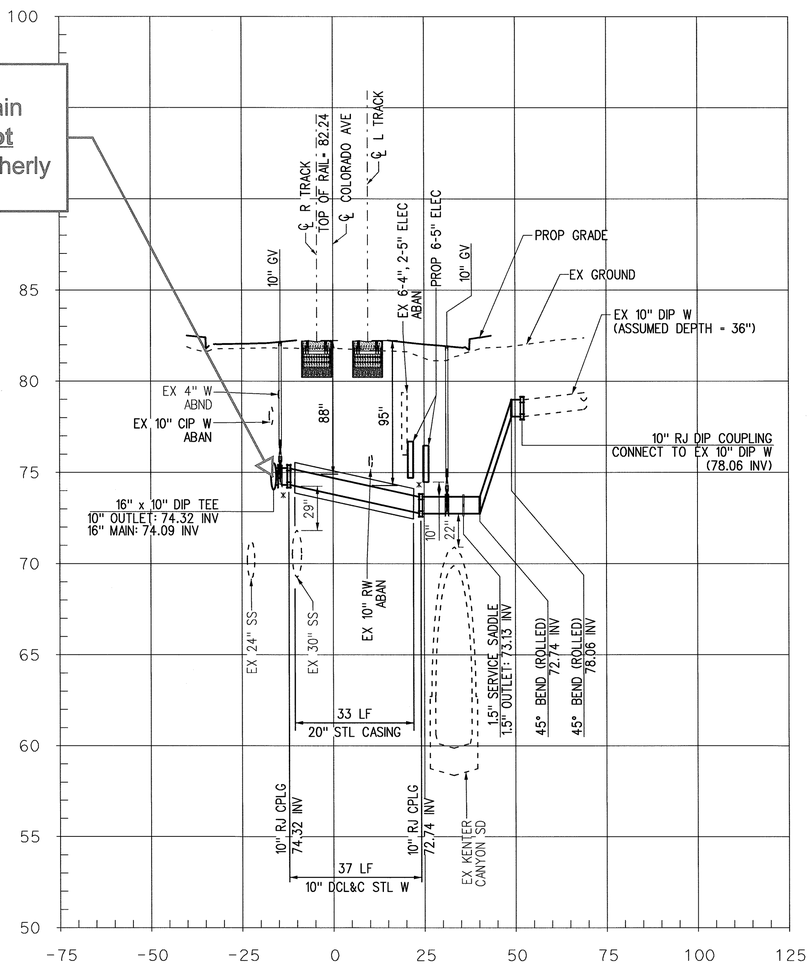

CROSS-SECTION @ 6TH ST
STA 18+44
HOR: 1" = 20'
VER: 1" = 4'
D-D
UW-3C-203

Cross - section has been changed. Design change to be submitted for final review.

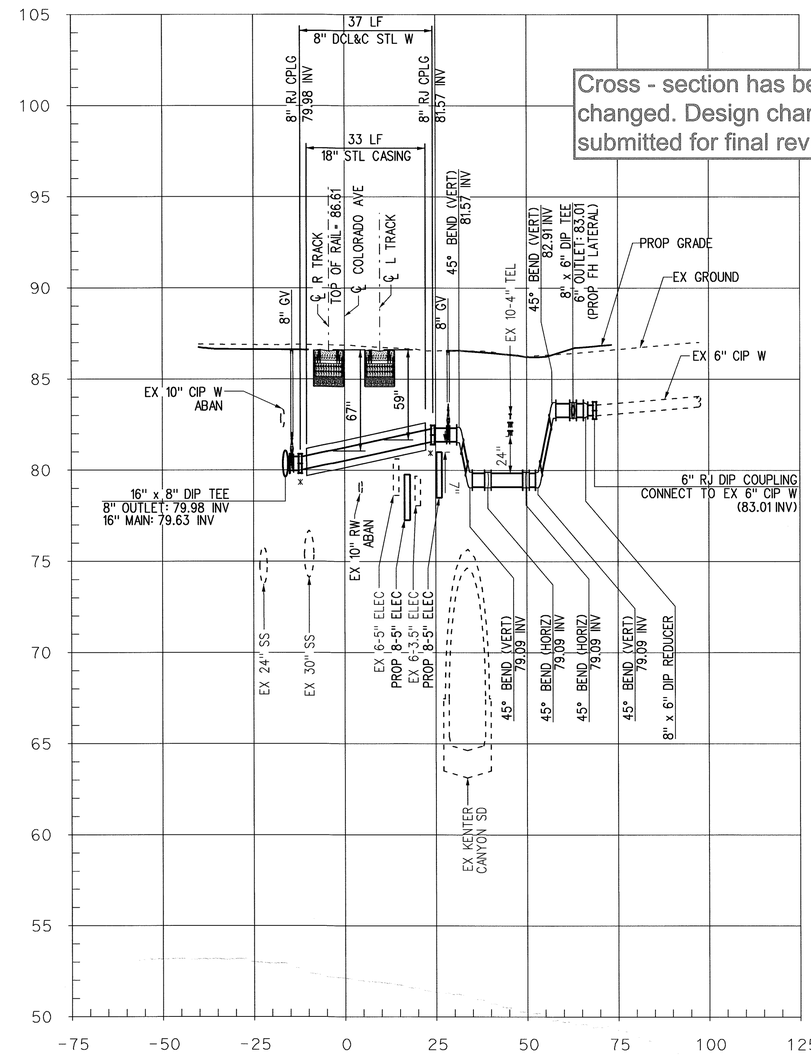

CROSS-SECTION @ 7TH ST
STA 21+99
HOR: 1" = 20'
VER: 1" = 4'
E-E
UW-3C-204

x NOTE:
PIPE DEFLECTION AT RJ COUPLING = 2.5°

SRJV
MAR 08 2013
ISSUED FOR CONSTRUCTION

REV	DATE	BY	APP	REG NO	EXPIRES	SEAL HOLDER	DESCRIPTION
0	11/21/12	KY	RG	C74831	12/31/13	RAFAEL GONZALEZ	APPROVED FOR CONSTRUCTION

DESIGNED BY K. YAMAKAWA
DRAWN BY K. YAMAKAWA
CHECKED BY R. GONZALEZ
IN CHARGE R. GONZALEZ
DATE 11/21/12

REGISTERED PROFESSIONAL ENGINEER RAFAEL GONZALEZ No. C74831 Exp. 12-31-13 CIVIL STATE OF CALIFORNIA

Exposition Metro Line Construction Authority
Expo

EXPO SKANSKA RADOS
444 South Flower Street
Suite 2200
Los Angeles, CA 90071
TEL (213) 443-7463
FAX (213) 362-9481

PARSONS BRINCKERHOFF

EXPOSITION LRT PROJECT- PHASE 2
WATER RELOCATION
CROSS SECTIONS
3 OF 3

Exposition Construction Authority Approved for Construction Drawings - AFC
MAR 07 2013

CONTRACT NO XP8902-002
DRAWING NO UW-3C-303 REV 0
SCALE HOR: 1"=20' VERT: 1"=4'
SHEET NO 59 OF 108

gonzalezr 4:01:42 PM 11/21/2012
Plot Driver=EXPO2-Half-BW-pdf.plt Pentable=EXPO2-PENTABLE.tbl
C:\EXPO2\Batch Plot\3C\expo2-UW-3C-303.plg

SCALES HORIZ SCALE: 1"=20' VERT SCALE: 1"=4'
SHEET
INDEX NUMBER

CURRENT STATUS

REVISION DATES (DESIGN STAGE ONLY)

Sheet Version 2.01

City of Santa Monica
Department of Public Works
1437 4th Street, Suite 300 Santa Monica, CA 90401
TEL. (310)458-8721 FAX. (310)393-4425
e-mail : smengineering@smgov.net

REFERENCE :
SUBMITTED BY: Dray de Vinet
APPROVED BY: LEON E. SWAIN, P.E., CITY ENGINEER
CITY DRAWING NO. U9211
SHEET NO.: 59 OF 108
DATE : 2-28 2013
ENGINEERING

REVIEWED : DATE : 20
REVIEWED : DATE : 20
REVIEWED : DATE : 20
CITY
APPROVED
NO. DATE BY DESCRIPTION
REVISIONS

Plotted by: gonzalezr 11/21/2012 C:\EXPO2\Batch Plot\3C\expo2-UW-3C-303.plg

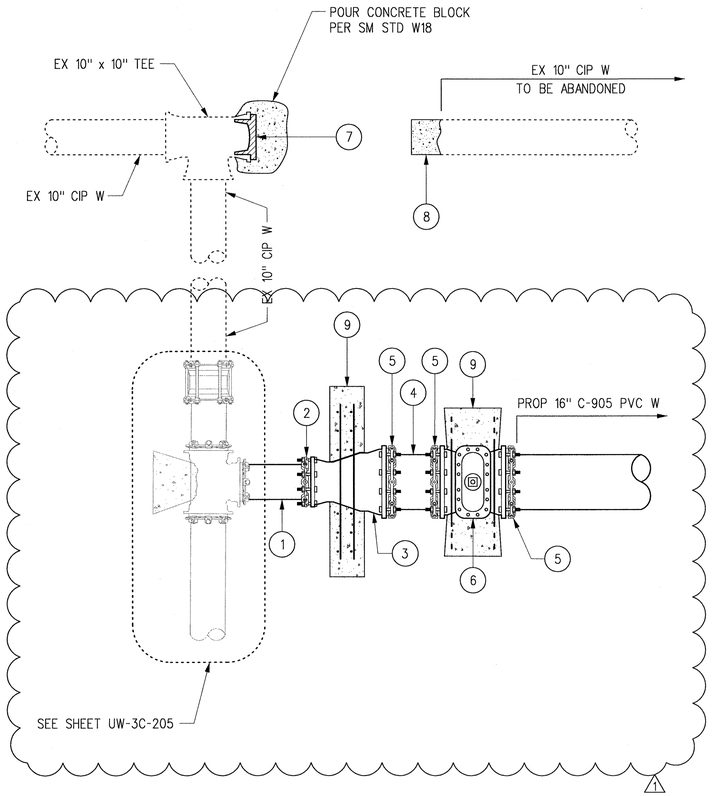

CONNECTION DETAIL 1
PLAN
NO SCALE
UW-3C-201

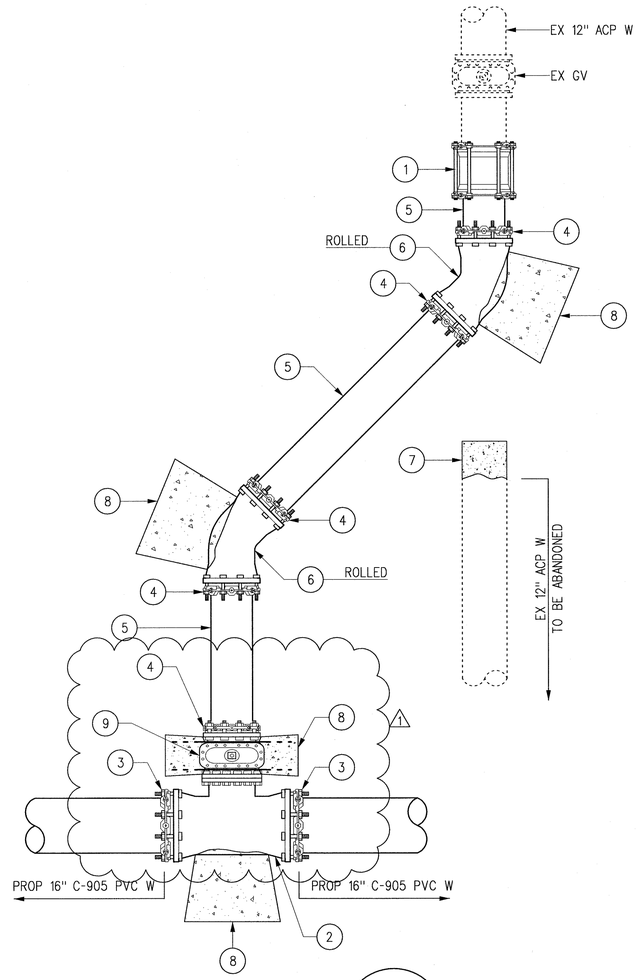

CONNECTION DETAIL 2
PLAN
NO SCALE
UW-3C-201

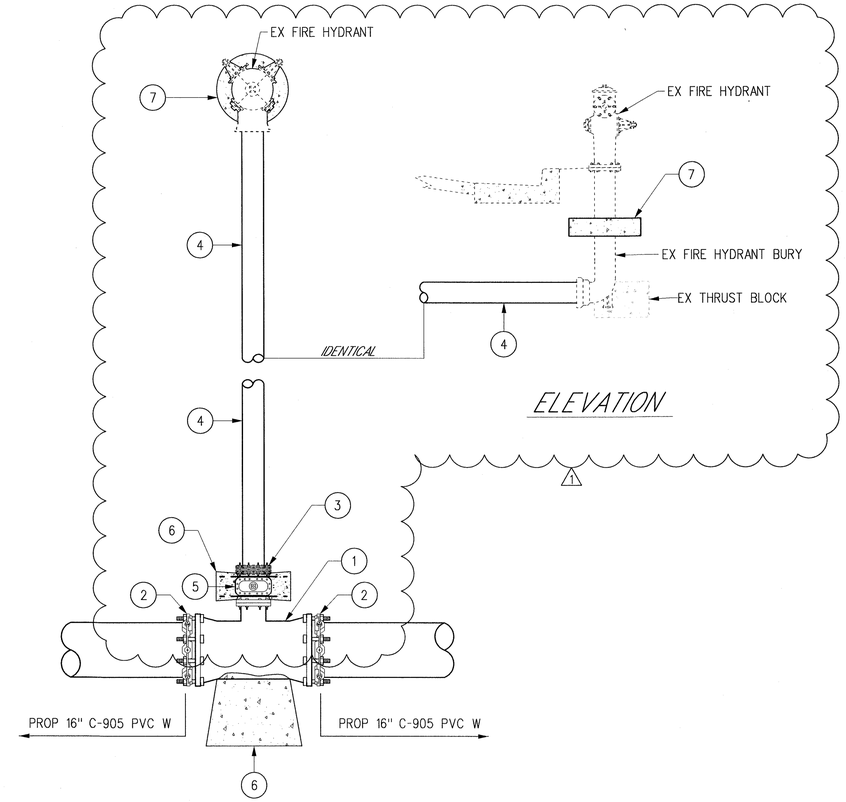

CONNECTION DETAIL 3
PLAN
NO SCALE
UW-3C-201

MATERIAL LIST - TIE-IN TO 10" CIP AT 4TH ST

ITEM NO.	ITEM	UNIT	QTY
1	10" C-900 PVC PIPE; L=24"	EA	1
2	10" MJ RESTRAINT	EA	1
3	16" x 10" (MJ x MJ) DIP BELL REDUCER	EA	1
4	16" C-905 PVC PIPE; L=24"	EA	1
5	16" MJ RESTRAINT	EA	3
6	16" RESILIENT WEDGE GATE VALVE (MJ x MJ)	EA	1
7	DIP PLUG	EA	1
8	CONCRETE SEAL	EA	1
9	CONCRETE THRUST BLOCK	EA	2

MATERIAL LIST - 12" ACP RE-CONNECT AT 4TH CT

ITEM NO.	ITEM	UNIT	QTY
1	12" FLEX TRANSITION COUPLING (ACP ROUGH BARREL BY C-900 PVC) WITH 316 STAINLESS STEEL RESTRAINING HARNESS (MINIMUM SLEEVE LENGTH OF 12")	EA	1
2	16" x 12" (MJ x FE) DIP TEE	EA	1
3	16" MJ RESTRAINT	EA	2
4	12" MJ RESTRAINT	EA	5
5	12" C-900 PVC PIPE; LENGTH AS REQUIRED (MINIMUM LENGTH = 24")	EA	3
6	12" - 45° MJ DIP BEND	EA	2
7	CONCRETE SEAL	EA	1
8	CONCRETE THRUST BLOCK	EA	4
9	12" RESILIENT WEDGE GATE VALVE (FE x MJ)	EA	1

MATERIAL LIST - FH RE-CONNECT ~ 4TH CT

ITEM NO.	ITEM	UNIT	QTY
1	16" x 6" (MJ x FE) DIP TEE	EA	1
2	16" MJ RESTRAINT	EA	2
3	6" MJ RESTRAINT	EA	3
4	6" C-900 PVC PIPE; LENGTH AS REQUIRED (MINIMUM LENGTH = 24")	EA	1
5	6" RESILIENT WEDGE GATE VALVE (FE x MJ)	EA	1
6	CONCRETE THRUST BLOCK	EA	2
7	CONCRETE COLLAR 2'-0" DIA. x 6" THICK; LOCATE AT MID-SPAN OF BURY (CONCRETE PER APWA SECTION 201)	EA	1

Exposition Construction Authority
Approved for Construction
Drawings - APC
NOV 08 2013

SRJV
NOV 08 2013
ISSUED FOR CONSTRUCTION

REV	DATE	BY	APP	REG NO	EXPIRES	SEAL HOLDER	DESCRIPTION
1	5/9/13	KY	PWT	C43086	3/31/14	PETER W. TUCCILLO	ECI 12
0	11/21/12	KY	RG	C74831	12/31/13	RAFAEL GONZALEZ	APPROVED FOR CONSTRUCTION

DESIGNED BY K. YAMAKAWA
DRAWN BY K. YAMAKAWA
CHECKED BY R. GONZALEZ
IN CHARGE R. GONZALEZ
DATE 11/21/12

REGISTERED PROFESSIONAL ENGINEER
PETER W. TUCCILLO
No. C43086
Exp. 03-31-14
CIVIL
STATE OF CALIFORNIA

Exposition Metro Line Construction Authority
Expo
EXPO SKANSKA RADOS
444 South Flower Street
Suite 2200
Los Angeles, CA 90071
TEL (213) 443-7463
FAX (213) 362-9481

PARSONS BRINCKERHOFF
CURRENT STATUS

EXPOSITION LRT PROJECT- PHASE 2
WATER RELOCATION
CONNECTION DETAILS
1 OF 4

CONTRACT NO XP8902-002
DRAWING NO UW-3C-401 REV 1
SCALE NO SCALE
SHEET NO 60 OF 108

Yamakawa 6:55:45 AM 5/10/2013
Plot Driver=EXPO2-PDF-Full-BW.plt
Pentable=EXPO2-PENTABLE.tbl
c:\projectwise\pb\projectwiseint\kyamakawa\dms09108\expo2-UW-3C-401.plg

SCALES HORIZ SCALE: VERT SCALE:
SHEET
INDEX NUMBER

REVISION DATES (DESIGN STAGE ONLY)

Sheet Version 2.01

REFERENCE:
SUBMITTED BY:
CITY DRAWING NO. U9211
SHEET NO. 60 OF 108
APPROVED BY: LEON E. SWAIN, P.E., CITY ENGINEER — DATE: 10-28 2013
ENGINEERING
REVIEWED: DATE: 20
REVIEWED: DATE: 10-28 2013
REVIEWED: DATE: 10-28 2013
CITY

REVISIONS

NO.	DATE	BY	DESCRIPTION	APPROVED

City of Santa Monica
Department of Public Works
1437 4th Street, Suite 300 Santa Monica, CA 90401
TEL. (310)458-8721 FAX. (310)393-4425
e-mail : smengineering@smgov.net

Plotted by: Yamakawa 5/10/2013 c:\projectwise\pb\projectwiseint\kyamakawa\dms09108\expo2-UW-3C-401.plg

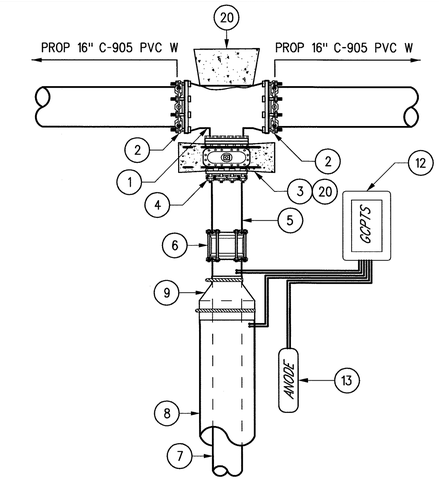

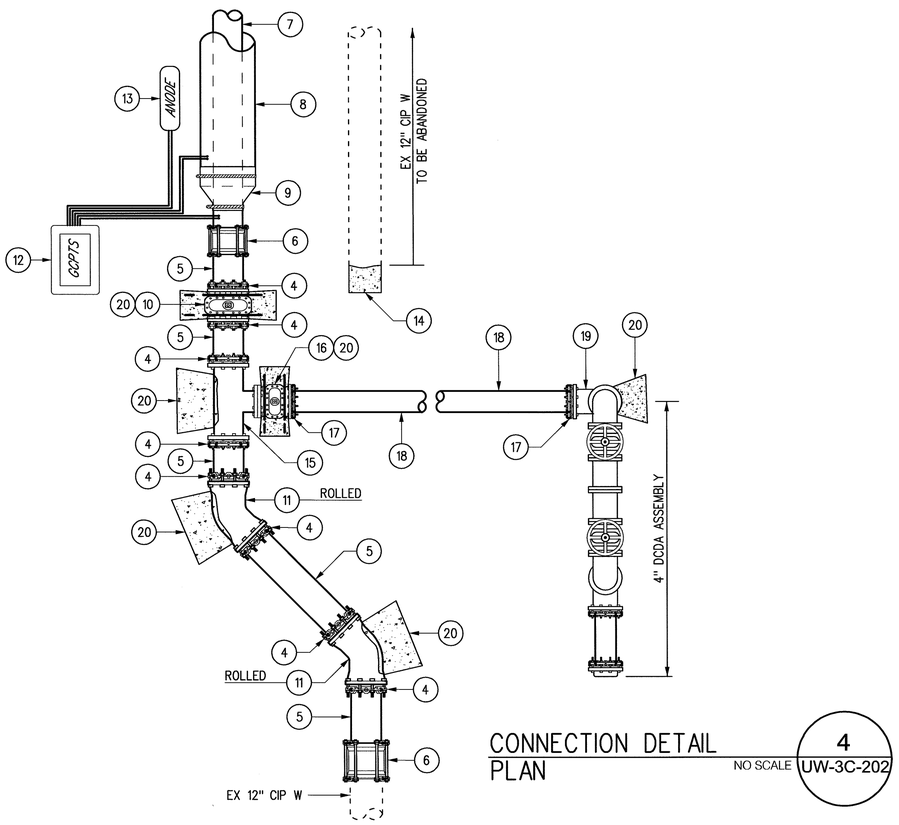

CONNECTION DETAIL PLAN — NO SCALE — 4 / UW-3C-202

MATERIAL LIST - 12" RE-CONNECT AT 5TH ST			
ITEM NO.	ITEM	UNIT	QTY
1	16" x 12" (MJ x FE) DIP TEE	EA	1
2	16" MJ RESTRAINT	EA	2
3	12" RESILIENT WEDGE GATE VALVE (FE x MJ)	EA	1
4	12" MJ RESTRAINT	EA	9
5	12" C-900 PVC PIPE (CL-200); LENGTH AS REQUIRED (MINIMUM LENGTH= 24")	EA	6
6	12" RJ COUPLING	EA	3
7	12" DCL&C STL PIPE	LF	77
8	24" STL CASING	LF	70
9	CASING END SEAL	EA	2
10	12" RESILIENT WEDGE GATE VALVE (MJ x MJ)	EA	1
11	12" - 45° MJ DIP BEND	EA	2
12	METER BOX WITH TWO (2) GCPTS (MAIN & CASING) TERMINAL BOARDS CONTRACTOR TO FIELD LOCATE	EA	2
13	32-LB HIGH-POTENTIAL MAGNESIUM ANODE	EA	2
14	CONCRETE SEAL	EA	1
15	12" x 4" (MJ x FE) DIP TEE	EA	1
16	4" RESILIENT WEDGE GATE VALVE (FE x MJ)	EA	1
17	4" MJ RESTRAINT	EA	2
18	4" C-900 PVC PIPE (CL-200); LENGTH AS REQUIRED (MINIMUM LENGTH= 24")	EA	1
19	4" - 90° MJ DIP BEND	EA	1
20	CONCRETE THRUST BLOCK	EA	8

MATERIAL LIST - 6" SERVICE MANIFOLD ~ 5TH CT			
ITEM NO.	ITEM	UNIT	QTY
1	16" x 6" (MJ x FE) DIP TEE	EA	1
2	16" MJ RESTRAINT	EA	2
3	6" RESILIENT WEDGE GATE VALVE (FE x MJ)	EA	1
4	6" MJ RESTRAINT	EA	6
5	6" C-900 PVC PIPE (CL-200); LENGTH AS REQUIRED (MINIMUM LENGTH= 24")	EA	4
6	6" RJ COUPLING	EA	2
7	6" DCL&C STL PIPE	LF	38
8	16" STL CASING	LF	34
9	CASING END SEAL	EA	2
10	METER BOX WITH TWO (2) GCPTS (MAIN & CASING) TERMINAL BOARDS CONTRACTOR TO FIELD LOCATE	EA	2
11	32-LB HIGH-POTENTIAL MAGNESIUM ANODE	EA	2
12	6" - 90° MJ DIP BEND	EA	1
13	6" x 4" (MJ x FE) DIP TEE	EA	1
14	6" MJ DIP CAP W/ 2" TAP	EA	1
15	4" RESILIENT WEDGE GATE VALVE (FE x FE)	EA	1
16	4" DIP PIPE (FE x FE); LENGTH AS REQUIRED	EA	1
17	4" x 3" - 90° FLANGED REDUCING BEND	EA	1
18	3" DIP PIPE (FE x FE); LENGTH AS REQUIRED	EA	1
19	2-PIECE BRONZE SERVICE SADDLE FOR O.D. CONTROLLED P.V.C. PIPE WITH 1" F.I.P.T. OUTLET & TYPE 316 STAINLESS STEEL SADDLE BOLTS AND NUTS	EA	4
20	1" BRONZE BALL CORPORATION STOP (M.I.P.T. x COMPRESSION)	EA	4
21	1" COPPER SERVICE PIPE, TYPE "K" (SOFT) LENGTH AS REQUIRED	EA	4
22	1" METER ASSEMBLY & METER BOX PER SM STD'S W6 & W15	EA	4
23	2" BRONZE NIPPLE, 6" LONG	EA	1
24	2" BRONZE CURB STOP	EA	1
25	2" BRONZE NIPPLE, 12" LONG	EA	1
26	2" - 90° BRONZE ELBOW	EA	1
27	2" BRONZE RISER (LENGTH AS REQUIRED)	EA	1
28	2" BRONZE COUPLING	EA	1
29	2" BRONZE PLUG	EA	1
30	8" CAST IRON RISER PIPE & LID PER SM STD W13	EA	2
31	1" - 90° COPPER ELBOW	EA	1
32	CONCRETE THRUST BLOCK	EA	7

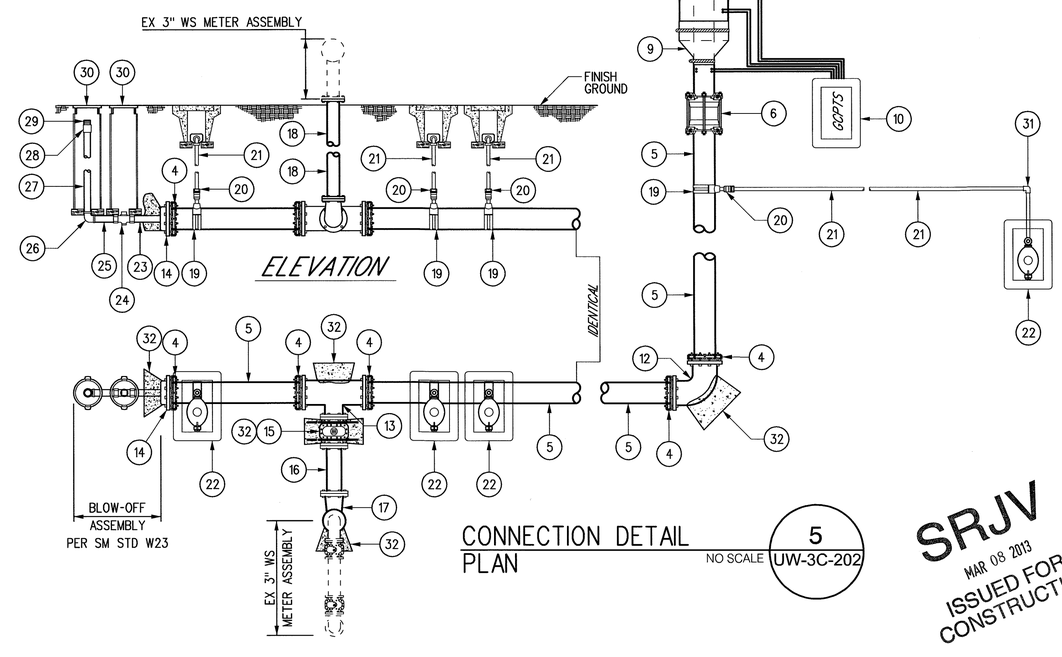

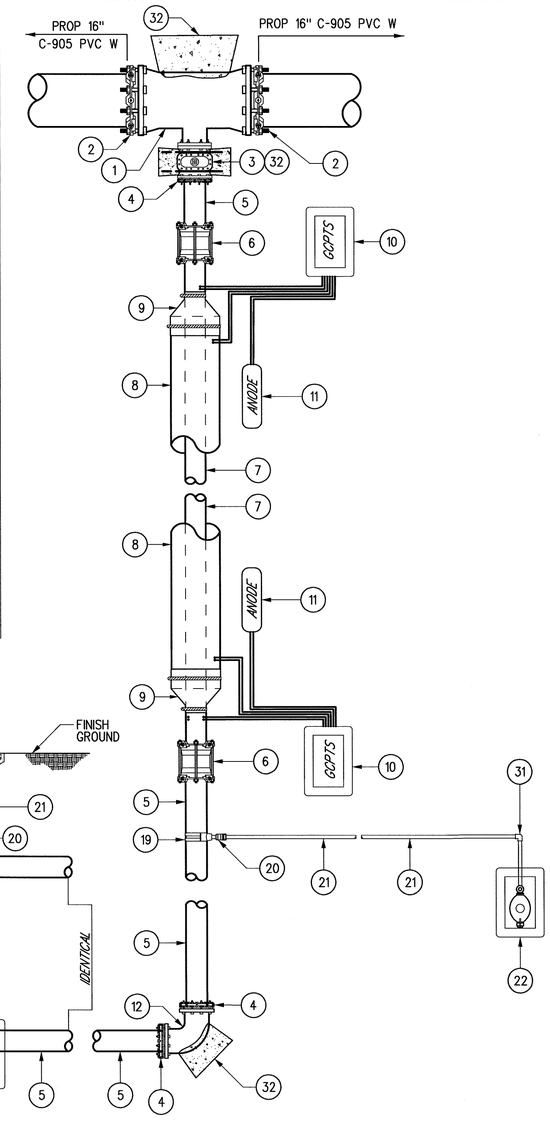

CONNECTION DETAIL PLAN — NO SCALE — 5 / UW-3C-202

SRJV
MAR 08 2013
ISSUED FOR CONSTRUCTION

REV	DATE	BY	APP	REG NO	EXPIRES	SEAL HOLDER	DESCRIPTION
0	11/21/12	KY	RG	C74831	12/31/13	RAFAEL GONZALEZ	APPROVED FOR CONSTRUCTION

REVISION DATES (DESIGN STAGE ONLY)

DESIGNED BY K. YAMAKAWA
DRAWN BY K. YAMAKAWA
CHECKED BY R. GONZALEZ
IN CHARGE R. GONZALEZ
DATE 11/21/12

REGISTERED PROFESSIONAL ENGINEER — RAFAEL GONZALEZ — NO. C74831 — EXP. 12-31-13 — CIVIL — STATE OF CALIFORNIA

Exposition Metro Line Construction Authority
Expo
EXPO SKANSKA RADOS
444 South Flower Street
Suite 2200
Los Angeles, CA 90071
TEL (213) 443-7463
FAX (213) 362-9481
PARSONS BRINCKERHOFF

EXPOSITION LRT PROJECT- PHASE 2
WATER RELOCATION
CONNECTION DETAILS
2 OF 4
Exposition Construction Authority Approved for Construction Drawings - AFC
MAR 07 2013

CONTRACT NO XP8902-002
DRAWING NO UW-3C-402 REV 0
SCALE NO SCALE
SHEET NO 61 OF 108

gonzalezr 4:01:43 PM 11/21/2012
Plot Driver=EXPO2-Half-BW-pdf.plt Pentable=EXPO2-PENTABLE.tbl C:\EXPO2\Batch Plot\3C\expo2-UW-3C-402.plg

SCALES HORIZ SCALE: VERT SCALE: SHEET INDEX NUMBER

Sheet Version 2.01

CITY OF SANTA MONICA
CITY DRAWING NO. U9211
SHEET NO.: 61 OF 108
DATE: 2-28 2013
REFERENCE:
SUBMITTED BY:
APPROVED BY: LEON E. SWAIN, P.E., CITY ENGINEER
REVIEWED: DATE: 20__
REVIEWED: DATE: 20__
REVIEWED: DATE: 20__
APPROVED
CITY ENGINEERING

REVISIONS: NO. DATE BY DESCRIPTION

City of Santa Monica
Department of Public Works
1437 4th Street, Suite 300 Santa Monica, CA 90401
TEL. (310)458-8721 FAX. (310)393-4425
e-mail : smengineering@smgov.net

Plotted by: gonzalezr 11/21/2012 C:\EXPO2\Batch Plot\3C\expo2-UW-3C-402.plg

CURRENT STATUS

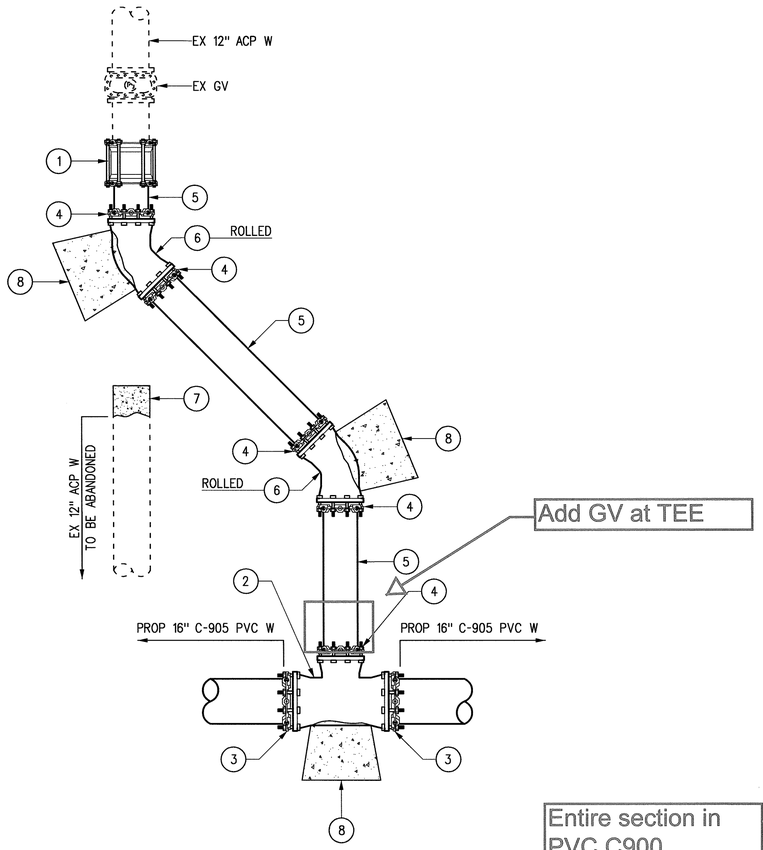

CONNECTION DETAIL PLAN — NO SCALE — 6 / UW-3C-202

MATERIAL LIST - 12" ACP RE-CONNECT AT 5TH CT			
ITEM NO.	ITEM	UNIT	QTY
1	12" FLEX TRANSITION COUPLING (ACP ROUGH BARREL BY C-900 PVC) WITH 316 STAINLESS STEEL RESTRAINING HARNESS (MINIMUM SLEEVE LENGTH OF 12")	EA	1
2	16" x 12" (MJ x MJ) DIP TEE	EA	1
3	16" MJ RESTRAINT	EA	2
4	12" MJ RESTRAINT	EA	5
5	12" C-900 PVC PIPE (CL-200); LENGTH AS REQUIRED (MINIMUM LENGTH = 24")	EA	3
6	12" - 45° MJ DIP BEND	EA	2
7	CONCRETE SEAL	EA	1
8	CONCRETE THRUST BLOCK	EA	3

MATERIAL LIST - 8" RE-CONNECT AT 6TH ST			
ITEM NO.	ITEM	UNIT	QTY
1	16" x 8" (MJ x FE) DIP TEE	EA	1
2	16" MJ RESTRAINT	EA	2
3	8" RESILIENT WEDGE GATE VALVE (FE x MJ)	EA	1
4	8" MJ RESTRAINT	EA	10
5	8" C-900 PVC PIPE (CL-200); LENGTH AS REQUIRED (MINIMUM LENGTH= 24")	EA	6
6	8" RJ COUPLING	EA	2
7	8" DCL&C STL PIPE	LF	37
8	18" STL CASING	LF	33
9	CASING END SEAL	EA	2
10	8" RESILIENT WEDGE GATE VALVE (MJ x MJ)	EA	1
11	METER BOX WITH TWO (2) GCPTS (MAIN & CASING) TERMINAL BOARDS CONTRACTOR TO FIELD LOCATE	EA	2
12	32-LB HIGH-POTENTIAL MAGNESIUM ANODE	EA	2
13	8" x 6" (MJ x FE) DIP TEE	EA	1
14	6" RESILIENT WEDGE GATE VALVE (FE x MJ)	EA	1
15	6" MJ RESTRAINT	EA	4
16	6" C-900 PVC PIPE (CL-200); LENGTH AS REQUIRED (MINIMUM LENGTH= 24")	EA	3
17	6" - 90° MJ DIP BEND	EA	1
18	6" RJ COUPLING	EA	2
19	8" - 45° MJ DIP BEND	EA	2
20	8" x 6" (MJ x MJ) DIP BELL REDUCER	EA	1
21	CONCRETE SEAL	EA	1
22	CONCRETE THRUST BLOCK	EA	9

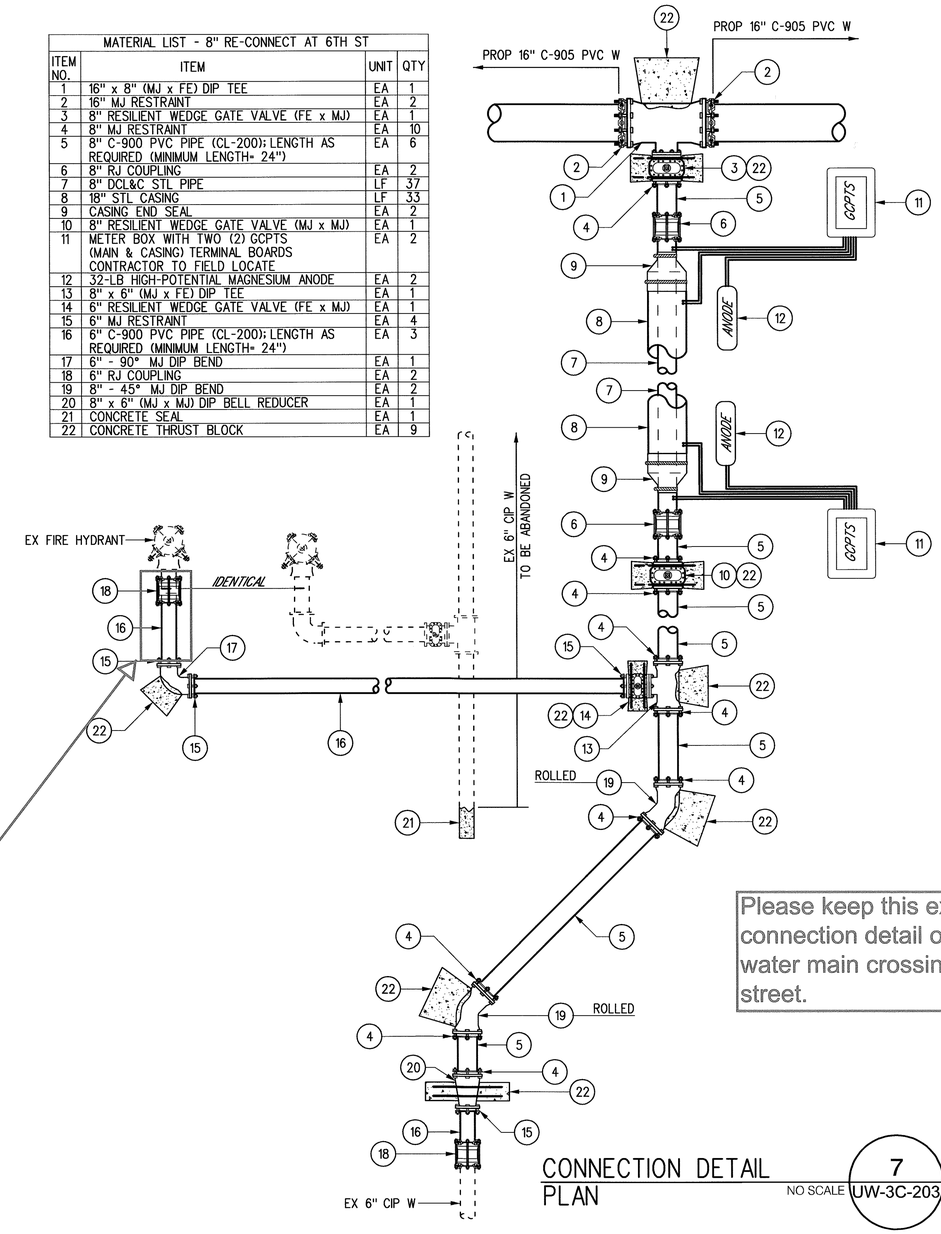

CONNECTION DETAIL PLAN — NO SCALE — 7 / UW-3C-203

SRJV
MAR 08 2013
ISSUED FOR CONSTRUCTION

REV	DATE	BY	APP	REG NO	EXPIRES	SEAL HOLDER	DESCRIPTION
0	11/21/12	KY	RG	C74831	12/31/13	RAFAEL GONZALEZ	APPROVED FOR CONSTRUCTION

DESIGNED BY K. YAMAKAWA
DRAWN BY K. YAMAKAWA
CHECKED BY R. GONZALEZ
IN CHARGE R. GONZALEZ
DATE 11/21/12

REGISTERED PROFESSIONAL ENGINEER — RAFAEL GONZALEZ — No. C74831 — Exp. 12-31-13 — CIVIL — STATE OF CALIFORNIA

Exposition Metro Line Construction Authority
Expo
EXPO SKANSKA RADOS
444 South Flower Street
Suite 2200
Los Angeles, CA 90071
TEL (213) 443-7463
FAX (213) 362-9481
PARSONS BRINCKERHOFF

EXPOSITION LRT PROJECT- PHASE 2
WATER RELOCATION
CONNECTION DETAILS
3 OF 4

Exposition Construction Authority
Approved for Construction
Drawings - AFC
MAR 07 2013

CONTRACT NO XP8902-002
DRAWING NO UW-3C-403 REV 0
SCALE NO SCALE
SHEET NO 62 OF 108

SCALES — HORIZ SCALE: — VERT SCALE:
SHEET
INDEX NUMBER

gonzalezr 4:01:44 PM 11/21/2012
Plot Driver=EXPO2-Half-BW-pdf.plt
Pentable=EXPO2-PENTABLE.tbl
C:\EXPO2\Batch Plot\3C\expo2-UW-3C-403.plg

CURRENT STATUS

City of Santa Monica
Department of Public Works
1437 4th Street, Suite 300 Santa Monica, CA 90401
TEL. (310)458-8721 FAX. (310)393-4425
e-mail : smengineering@smgov.net

CITY DRAWING NO. U9211
SHEET NO. 62 OF 108
DATE: 2-28 2013
APPROVED BY: LEON E. SWAN, P.E., CITY ENGINEER
ENGINEERING
REFERENCE:
SUBMITTED BY:
REVIEWED: DATE: 20
REVIEWED: DATE: 20
REVIEWED: DATE: 20
CITY
APPROVED
REVISIONS: NO. DATE BY DESCRIPTION

Plotted by: gonzalezr 11/21/2012 C:\EXPO2\Batch Plot\3C\expo2-UW-3C-403.plg

REVISION DATES (DESIGN STAGE ONLY)

Sheet Version 2.01

FOR ADDITIONAL DETAIL SEE DRFI 10167 AND 3RFI 20050

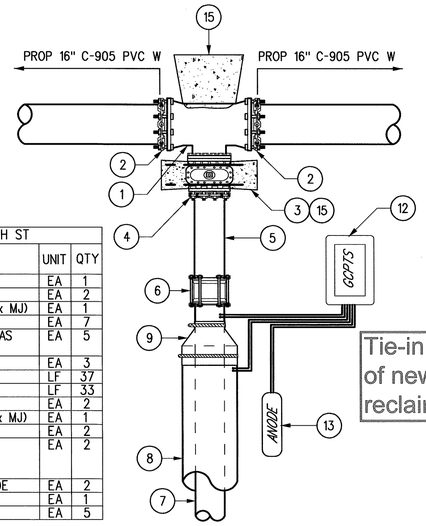

MATERIAL LIST - 10" RE-CONNECT AT 6TH ST			
ITEM NO.	ITEM	UNIT	QTY
1	16" x 10" (MJ x FE) DIP TEE	EA	1
2	16" MJ RESTRAINT	EA	2
3	10" RESILIENT WEDGE GATE VALVE (FE x MJ)	EA	1
4	10" MJ RESTRAINT	EA	7
5	10" C-900 PVC PIPE (CL-200); LENGTH AS REQUIRED (MINIMUM LENGTH= 24")	EA	5
6	10" RJ COUPLING	EA	3
7	10" DCL&C STL PIPE	LF	37
8	20" STL CASING	LF	33
9	CASING END SEAL	EA	2
10	10" RESILIENT WEDGE GATE VALVE (MJ x MJ)	EA	1
11	10" - 45° MJ DIP BEND	EA	2
12	METER BOX WITH TWO (2) GCPTS (MAIN & CASING) TERMINAL BOARDS CONTRACTOR TO FIELD LOCATE	EA	2
13	32-LB HIGH-POTENTIAL MAGNESIUM ANODE	EA	2
14	CONCRETE SEAL	EA	1
15	CONCRETE THRUST BLOCK	EA	5

Please keep this existing connection detail of the water main crossing at 6th street.

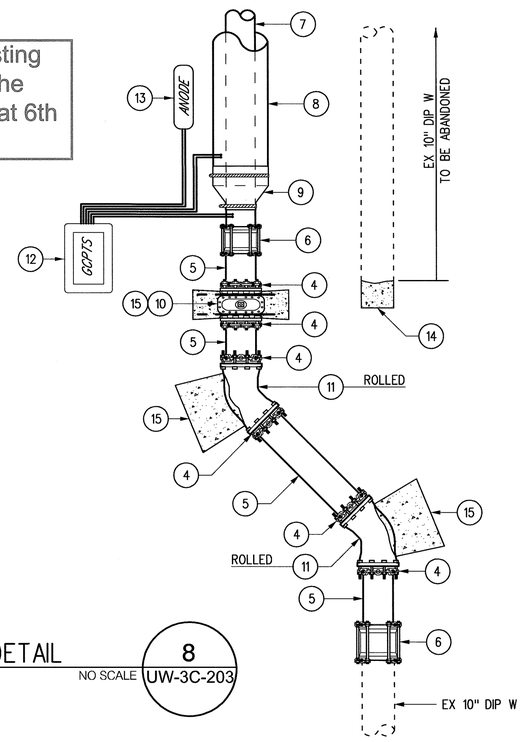

CONNECTION DETAIL PLAN — NO SCALE — 8 UW-3C-203

MATERIAL LIST - 12" ACP RE-CONNECT AT 6TH CT			
ITEM NO.	ITEM	UNIT	QTY
1	12" FLEX TRANSITION COUPLING (ACP ROUGH BARREL BY C-900 PVC) WITH 316 STAINLESS STEEL RESTRAINING HARNESS (MINIMUM SLEEVE LENGTH OF 12")	EA	1
2	16" x 12" (MJ x FE) DIP TEE	EA	1
3	16" MJ RESTRAINT	EA	2
4	12" RESILIENT WEDGE GATE VALVE (FE x MJ)	EA	1
5	12" MJ RESTRAINT	EA	5
6	12" C-900 PVC PIPE (CL-200); LENGTH AS REQUIRED (MINIMUM LENGTH = 24")	EA	3
7	12" - 45° MJ DIP BEND	EA	2
8	CONCRETE SEAL	EA	1
9	CONCRETE THRUST BLOCK	EA	4

Tie-in water north of newly installed reclaimed water.

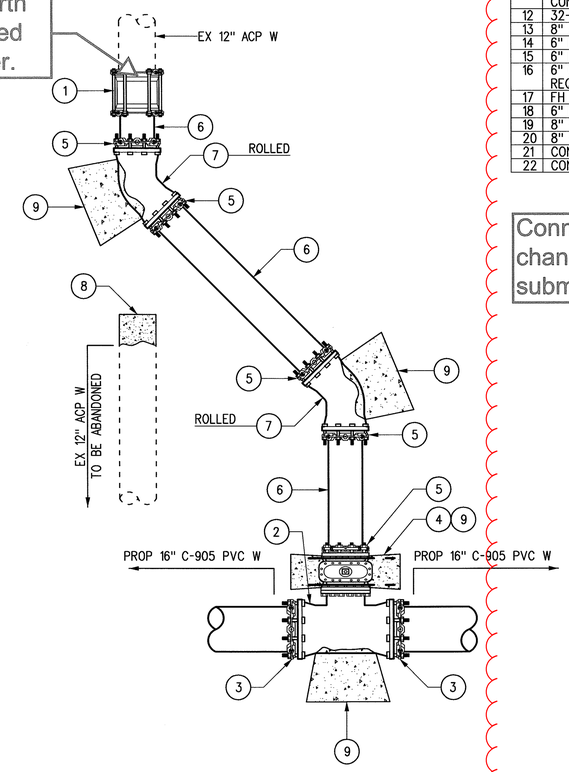

CONNECTION DETAIL PLAN — NO SCALE — 9 UW-3C-204

MATERIAL LIST - 8" RE-CONNECT AT 7TH ST			
ITEM NO.	ITEM	UNIT	QTY
1	16" x 8" (MJ x FE) DIP TEE	EA	1
2	16" MJ RESTRAINT	EA	2
3	8" RESILIENT WEDGE GATE VALVE (FE x MJ)	EA	1
4	8" MJ RESTRAINT	EA	14
5	8" C-900 PVC PIPE (CL-200); LENGTH AS REQUIRED (MINIMUM LENGTH= 24")	EA	8
6	8" RJ COUPLING	EA	2
7	8" DCL&C STL PIPE	LF	37
8	18" STL CASING	LF	33
9	CASING END SEAL	EA	2
10	8" RESILIENT WEDGE GATE VALVE (MJ x MJ)	EA	1
11	METER BOX WITH TWO (2) GCPTS (MAIN & CASING) TERMINAL BOARDS CONTRACTOR TO FIELD LOCATE	EA	2
12	32-LB HIGH-POTENTIAL MAGNESIUM ANODE	EA	2
13	8" x 6" (MJ x FE) DIP TEE	EA	1
14	6" RESILIENT WEDGE GATE VALVE (FE x MJ)	EA	1
15	6" MJ RESTRAINT	EA	2
16	6" C-900 PVC PIPE (CL-200); LENGTH AS REQUIRED (MINIMUM LENGTH= 24")	EA	2
17	FH ASSEMBLY & BURY	EA	1
18	6" RJ COUPLING	EA	1
19	8" - 45° MJ DIP BEND	EA	4
20	8" x 6" (MJ x MJ) DIP BELL REDUCER	EA	1
21	CONCRETE SEAL	EA	1
22	CONCRETE THRUST BLOCK	EA	10

Connection has been changed. Design change to be submitted for final review.

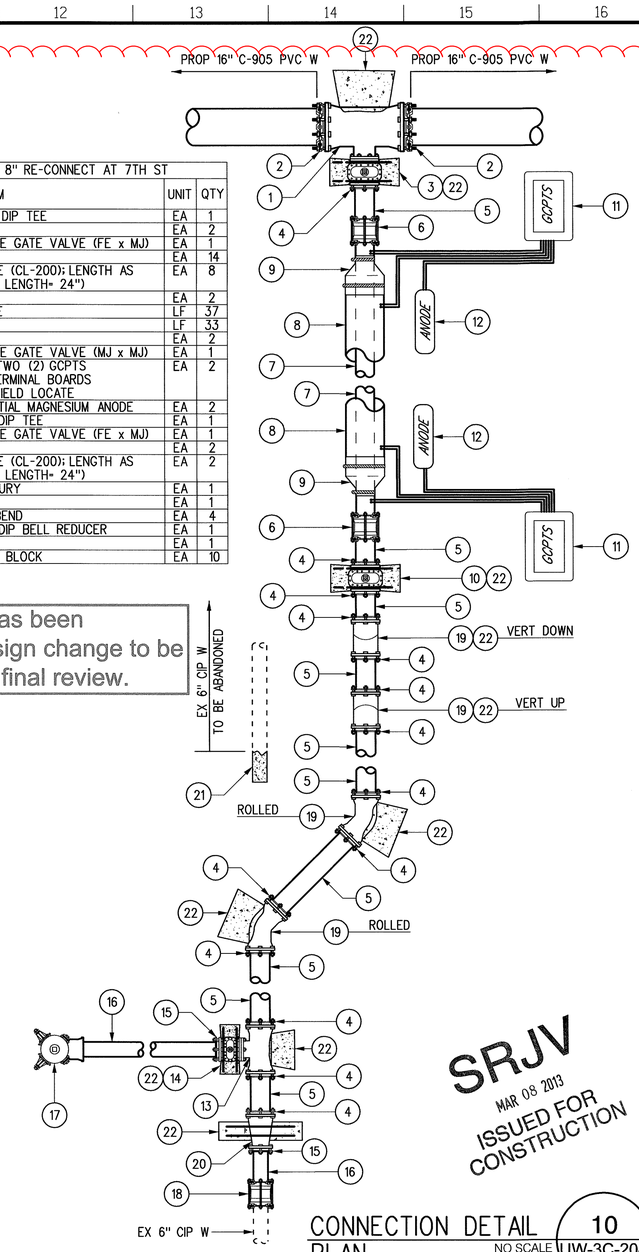

CONNECTION DETAIL PLAN — NO SCALE — 10 UW-3C-204

SRJV
MAR 08 2013
ISSUED FOR CONSTRUCTION

REV	DATE	BY	APP	REG NO	EXPIRES	SEAL HOLDER	DESCRIPTION
0	11/21/12	KY	RG	C74831	12/31/13	RAFAEL GONZALEZ	APPROVED FOR CONSTRUCTION

REVISION DATES (DESIGN STAGE ONLY)

DESIGNED BY K. YAMAKAWA
DRAWN BY K. YAMAKAWA
CHECKED BY R. GONZALEZ
IN CHARGE R. GONZALEZ
DATE 11/21/12

REGISTERED PROFESSIONAL ENGINEER — RAFAEL GONZALEZ — NO. C74831 — EXP. 12-31-13 — CIVIL — STATE OF CALIFORNIA

Exposition Metro Line Construction Authority
Expo
EXPO SKANSKA RADOS
444 South Flower Street
Suite 2200
Los Angeles, CA 90071
TEL (213) 443-7463
FAX (213) 362-9481
PARSONS BRINCKERHOFF

EXPOSITION LRT PROJECT- PHASE 2
WATER RELOCATION
CONNECTION DETAILS
4 OF 4

Exposition Construction Authority Approved for Construction Drawings - AFC
MAR 07 2013

CONTRACT NO XP8902-002
DRAWING NO UW-3C-404 REV 0
SCALE NO SCALE
SHEET NO 63 OF 108

gonzalezr 4:01:45 PM 11/21/2012
Plot Driver=EXPO2-Half-BW-pdf.plt Pentable=EXPO2-PENTABLE.tbl C:\EXPO2\Batch Plot\3C\expo2-UW-3C-404.plg

SCALES — HORIZ SCALE: — VERT SCALE:
SHEET
INDEX NUMBER

CURRENT STATUS

Sheet Version 2.81

CITY DRAWING NO. U9211
SHEET NO.: 63 OF 108
DATE: 2-28 20 13
SUBMITTED BY:
APPROVED BY: LEON E. SWAIN, P.E., CITY ENGINEER
ENGINEERING
REFERENCE:
REVIEWED: DATE: 20
REVIEWED: DATE: 20
REVIEWED: DATE: 20
CITY
NO. DATE BY DESCRIPTION
REVISIONS
APPROVED

City of Santa Monica
Department of Public Works
1437 4th Street, Suite 300 Santa Monica, CA 90401
TEL. (310)458-8721 FAX. (310)393-4425
e-mail : smengineering@smgov.net

Plotted by: gonzalezr 11/21/2012 C:\EXPO2\Batch Plot\3C\expo2-UW-3C-404.plg

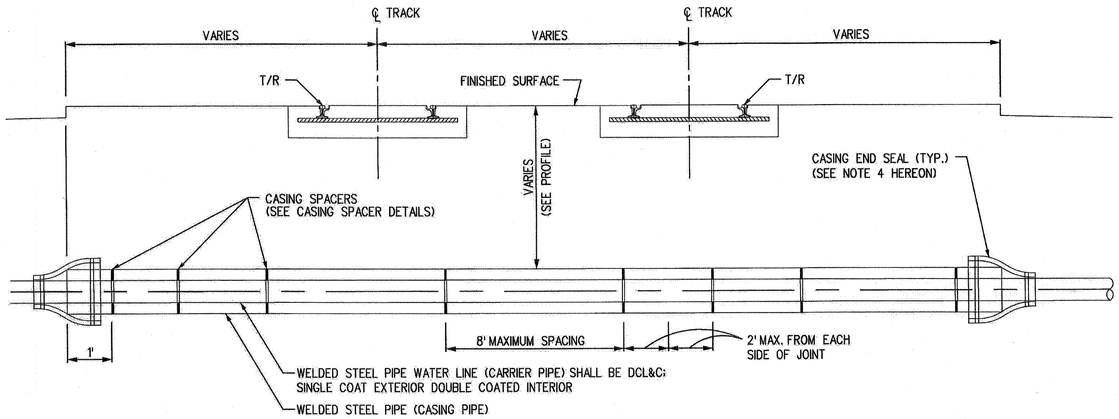

TRACK CROSSING AND PIPE CASING DETAIL

NO SCALE

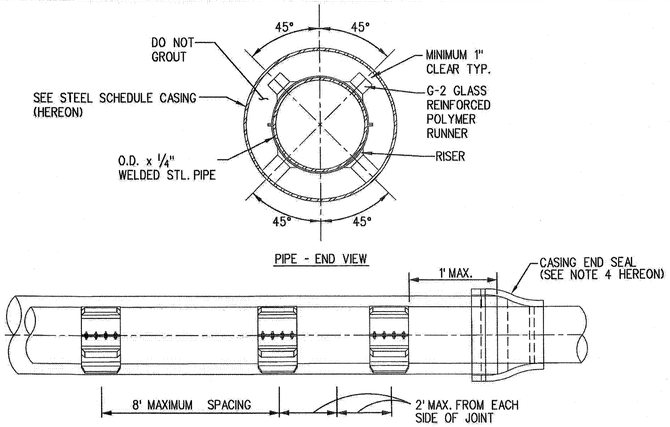

CASING SPACER DETAILS (PSI MODEL C12G-2)

NO SCALE

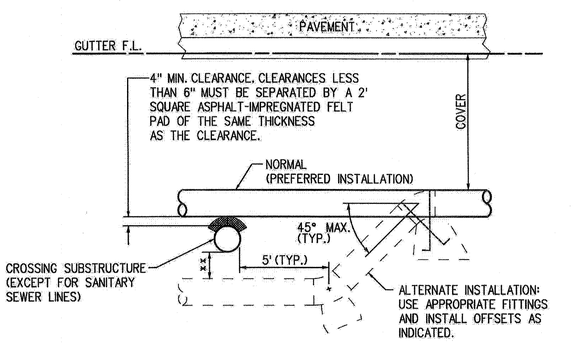

xx - 6" MIN. CLEARANCE FOR 12" DIA. AND SMALLER PIPE
12" MIN. CLEARANCE FOR LARGER THAN 12" DIA. PIPE

NOTE: THE MINIMUM CLEARANCES FOR UNDERCROSSING SHOWN HEREON SUPERCEDE THE MINIMUM OF 4"

TYPICAL SUBSTRUCTURE CROSSING DETAIL

NO SCALE

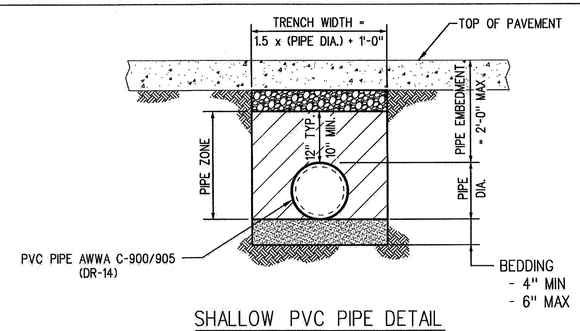

SHALLOW PVC PIPE DETAIL

NO SCALE

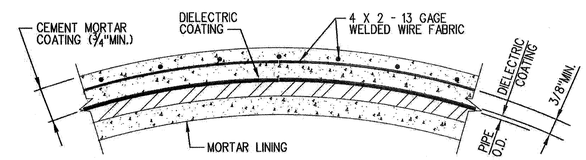

CEMENT MORTAR COATING W/DI-ELECTRIC COATING

NO SCALE

NOTES:

1. FOR PIPES BURIED UNDER ROADWAYS AND SIDEWALKS AT DEPTHS LESS THAN 24" THAT ARE NOT COVERED UNDER CITY OF SANTA MONICA STANDARD PLAN SM 16, PIPE INSTALLATION, BEDDING, AND BACKFILL SHALL FOLLOW THE DETAILS SHOWN ABOVE.
2. PIPE BEDDING SHALL HAVE A MINIMUM OF COMPACTION OF 95% OF MAX DENSITY USING MATERIAL MATCHING ASTM D-2321 CLASS 1A OR 1B. MATERIAL SHALL BE FREE OF ANY ROCKS GREATER THAN 1.5" IN DIAMETER. BEDDING SHALL HAVE A MINIMUM THICKNESS OF 4" AND A MAX THICKNESS OF 6".
3. THE PIPE ZONE SHALL EXTEND A MINIMUM OF 12" FROM TOP OF THE PIPE. IN THE CASE WHERE A CONCRETE CURB AND/OR GUTTER IS PLACED DIRECTLY ABOVE THE PIPE ZONE, THE PIPE ZONE MAY BE REDUCED TO A MINIMUM OF 10" FROM THE TOP OF THE PIPE. BACKFILL MATERIAL IN THE PIPE ZONE SHALL BE PLACED IN HORIZONTAL LAYERS OF NO MORE THAN 6" THICK AND COMPACTED TO A MINIMUM OF 95% OF MAXIMUM DENSITY. THE BACKFILL MATERIAL SHALL MATCH ASTM D-2321 CLASS 1A OR 1B. MATERIAL SHALL BE FREE OF ANY ROCKS GREATER THAN 1.5" IN DIAMETER.
4. BACKFILL IN THE AREA ABOVE THE PIPE ZONE SHALL BE CRUSHED MISCELLANEOUS BASE WITH 95% RELATIVE COMPACTION.
5. MINIMUM COVER SHALL BE 1'-0" FROM TOP OF THE PAVEMENT SURFACE TO THE TOP OF THE PIPE.
6. ROLLING EQUIPMENT SHOULD NOT BE USED UNTIL A MINIMUM OF 18" OF BACKFILL MATERIAL HAS BEEN PLACED OVER THE TOP OF THE PIPE. IF A HYDRO HAMMER IS TO BE USED TO COMPACT THE BACKFILL, A MINIMUM OF 3'-0" COVER IS REQUIRED.
7. THIS DETAIL SHALL ONLY BE USED FOR AWWA C-900 (DR-14) OR AWWA C-905 (DR-14) PVC PIPES WITH PIPE DIAMETERS 18" OR LESS.

NOTES:

1. PLASTIC SPACERS SHALL BE SPACED AT 8'-0" MAX. INTERVALS.
2. THICKNESSES ARE MINIMUM. CONTRACTOR MAY ELECT TO USE THICKER WALL PIPE OR LARGER DIAMETER CASING PIPE AT NO ADDITIONAL COST.
3. CASING PIPE SHALL BE NEW. ALL CASING SECTIONS SHALL BE JOINED BY CONTINUOUS WELD. ALL FIELD WELDS SHALL BE BUTT WELDED FULL CIRCUMFERENCE WITH FULL PENETRATION.
4. EACH END OF THE CASING SHALL BE SEALED WITH A WATERTIGHT FLEXIBLE SEALER - 1/8" THICK, EPDM CASING END SEAL (MODEL C) WITH STAINLESS STEEL WORM-SCREW BAND CLAMPS.
5. ALL CARRIER PIPE JOINTS WITHIN THE CASING SHALL BE WELDED AND DIELECTRICALLY COATED.
6. ELECTRICAL OR METALLIC INSULATION BETWEEN THE CASING AND CARRIER PIPE SHALL BE MAINTAINED (NO METAL CONTACT).

STEEL CASING SCHEDULE

CARRIER PIPE (NOMINAL SIZE)	CASING PIPE SIZE	CASING WALL THICKNESS
1"	4"	0.237"
1.5"	6"	0.280
2"	6"	0.280"
4"	14"	0.437"
6"	16"	0.500"
8"	18"	0.500"
10"	20"	0.500"
12"	24"	0.500"

SRJV
FEB 20 2013
ISSUED FOR CONSTRUCTION

REV	DATE	BY	APP	REG NO	EXPIRES	SEAL HOLDER	DESCRIPTION
0	11/21/12	KY	RG	C74831	12/31/13	RAFAEL GONZALEZ	APPROVED FOR CONSTRUCTION

REVISION DATES DESIGN STAGE ONLY!

DESIGNED BY K. YAMAKAWA
DRAWN BY K. YAMAKAWA
CHECKED BY R. GONZALEZ
IN CHARGE R. GONZALEZ
DATE 11/21/12

REGISTERED PROFESSIONAL ENGINEER RAFAEL GONZALEZ No. C74831 Exp. 12-31-13 CIVIL STATE OF CALIFORNIA

Exposition Metro Line Construction Authority
Expo
EXPO SKANSKA RADOS
444 South Flower Street
Suite 2200
Los Angeles, CA 90071
TEL (213) 443-7463
FAX (213) 362-9481

PARSONS BRINCKERHOFF

Exposition Construction Authority
Approved for Construction
Drawings - AFC
FEB 19 2013

EXPOSITION LRT PROJECT- PHASE 2
WATER RELOCATION
MISCELLANEOUS DETAILS

CONTRACT NO XP8902-002
DRAWING NO UW-3C-501 REV 0
SCALE NO SCALE
SHEET NO 64 OF 108

gonzalezr 4:01:45 PM 11/21/2012
Plot Driver=EXPO2-Half-BW-pdf.plt Pentable=EXPO2-PENTABLE.tbl C:\EXPO2\Batch Plot\3C\expo2-UW-3C-501.plg

SCALES HORIZ SCALE: VERT SCALE: SHEET INDEX NUMBER

CURRENT STATUS

Sheet Version 2.01

CITY DRAWING NO. U9211
SHEET NO.: 64 OF 108
DATE 1-15 20 13
SUBMITTED BY:
APPROVED:
REFERENCE:
REVIEWED: DATE: 20
REVIEWED: DATE: 20
REC'D DATE 1-15 20 13
APPROVED
CITY ENGINEER
SEAN FOWLER, P.E., CITY ENGINEER
ENGINEERING

NO.	DATE	BY	DESCRIPTION
			REVISIONS

City of Santa Monica
Department of Public Works
1437 4th Street, Suite 300 Santa Monica, CA 90401
TEL. (310)458-8721 FAX. (310)393-4425
e-mail : smengineering@smgov.net

Plotted by: gonzalezr 11/21/2012 C:\EXPO2\Batch Plot\3C\expo2-UW-3C-501.plg

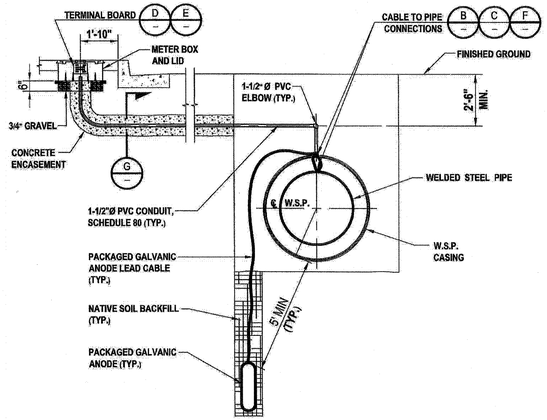

SINGLE ANODE GALVANIC CATHODIC PROTECTION TEST STATION (GCPTS) A

DETAIL NOTES:

1. INSTALL THE GALVANIC ANODE CATHODIC PROTECTION SYSTEM COMPONENTS SHOWN HERON AND IN ACCORDANCE WITH THE LOCATIONS INDICATED ON THE PLAN SHEETS, AND ONLY WHEN THE DIELECTRIC UNDERCOAT SYSTEM FOR THE WELDED STEEL PIPE IS COAL TAR ENAMEL OR EXTRUDED POLYOLEFIN.
2. PACKAGED GALVANIC ANODES MAY BE INSTALLED VERTICALLY OR HORIZONTALLY.
3. CONTRACTOR TO INSTALL TWO (STEEL CASING & STEEL MAIN) TERMINAL BOARDS WITHIN ONE METER BOX THAT ARE TO BE LOCATED AT EACH END OF THE PIPE WITH CASING RELOCATIONS.

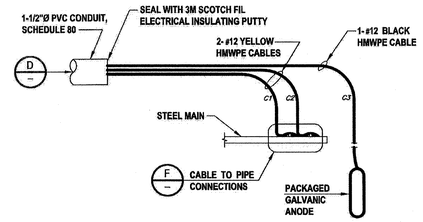

GCPTS WIRE DIAGRAM AT STEEL MAIN B

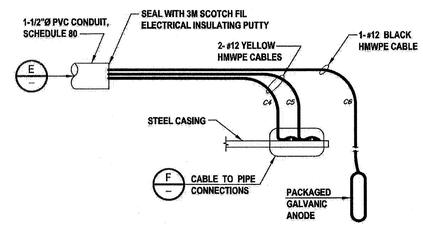

GCPTS WIRE DIAGRAM AT STEEL CASING C

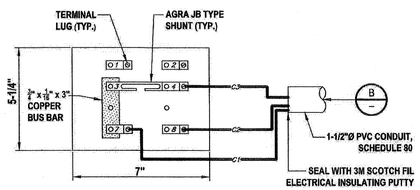

STEEL MAIN GCPTS TERMINAL BOARD D

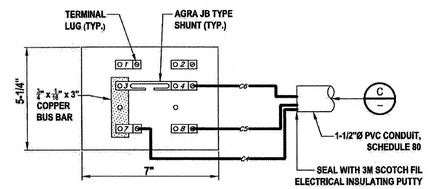

STEEL CASING GCPTS TERMINAL BOARD E

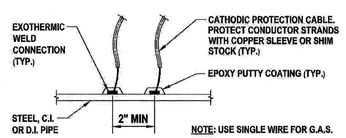

EXOTHERMIC WELD CONNECTION - DETAIL F

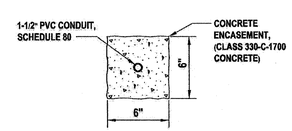

CONDUIT ENCASEMENT - SECTION G

CORROSION MITIGATION NOTES

1. INSTALLATION OF CATHODIC PROTECTION MATERIALS AND TESTING OF THE CATHODIC PROTECTION SYSTEM SHALL BE DONE BY AN INDIVIDUAL CERTIFIED BY NACE INTERNATIONAL AS A CATHODIC PROTECTION SPECIALIST OR BY PERSONS UNDER THE SUPERVISION OF A CERTIFIED CATHODIC PROTECTION SPECIALIST. PROOF OF CERTIFICATION SHALL BE SUBMITTED TO THE ENGINEER.
2. SUBMIT TO THE ENGINEER CATALOG CUTS AND TECHNICAL DATA SHEETS OF THE PRODUCTS TO BE INSTALLED AS PART OF THE CATHODIC PROTECTION SYSTEM.
3. TEST CABLES SHALL BE SINGLE CONDUCTOR, #12 GAGE, STRANDED COPPER, WITH HMWPE INSULATION, RATED AT 600 VOLTS. TEST CABLE COLORS SHALL BE AS INDICATED ON THE DRAWINGS.
4. CONDUIT USED FOR THE CABLE INSTALLATIONS SHALL BE RIGID SCHEDULE 80 PVC. ALL FITTINGS USED FOR THE CONNECTION OF CONDUIT SECTIONS SHALL BE SCHEDULE 80 PVC.
5. CP TEST STATION TERMINAL BOARDS SHALL BE 1/4 INCH THICK MICARTA INSULATING PANELS WITH SHUNTS, TERMINAL LUGS, AND BRASS FASTENERS. DIMENSIONS AND CONFIGURATION OF THE TERMINAL BOARDS SHALL BE AS INDICATED ON THE DRAWINGS.
6. THE MAGNESIUM ANODES OF THE GALVANIC ANODE PACKAGES SHALL CONFORM TO ASTM B 843 CHEMICAL REQUIREMENTS FOR GRADE M1C HIGH POTENTIAL MAGNESIUM ANODES. THE MAGNESIUM ANODES SHALL MEET THE MINIMUM OPEN CIRCUIT POTENTIAL AND CURRENT EFFICIENCY REQUIREMENTS OF THE ASTM G 97 STANDARD TEST METHOD. THE ANODE PACKAGES SHALL WEIGH NOT LESS THAN 70 POUNDS AND CONTAIN A MAGNESIUM ANODE WEIGHING NOT LESS THAN 32 POUNDS PACKAGED IN A CLOTH BAG WITH A BACKFILL MIXTURE OF 75 PERCENT GYPSUM, 20 PERCENT BENTONITE CLAY, AND 5 PERCENT SODIUM SULFATE. THE GALVANIC ANODE PACKAGE SHALL HAVE A MAXIMUM LENGTH OF 30 INCHES. THE ANODE SHALL HAVE A FACTORY INSTALLED LEAD CABLE WHICH IS A SINGLE CONDUCTOR, #12 GAGE, STRANDED COPPER, WITH HMWPE INSULATION, RATED AT 600 VOLTS. THE LEAD CABLE SHALL BE OF SUFFICIENT LENGTH TO EXTEND CONTINUOUS AND UNSPLICED FROM THE INSTALLED LOCATION OF THE ANODE PACKAGE TO THE PIPELINE CONNECTION OR TO THE TEST STATION METER BOX CONNECTION, DEPENDING ON THE ANODE PACKAGE'S USAGE. THE ANODE PACKAGES SHALL BE DELIVERED TO AND STORED AT THE JOB SITE IN WATERPROOF BAGS.
7. CABLE CONNECTIONS TO THE PIPELINES SHALL BE MADE BY THE EXOTHERMIC WELD METHOD ON THE TOP OF THE INSTALLED PIPELINE. CABLE WELD CONNECTIONS SHALL BE COATED WITH A TWO-PART EPOXY PUTTY APPROVED BY THE ENGINEER. ANY RESIDUE OR DEBRIS SHALL BE REMOVED FROM AREAS TO BE COATED BEFORE THE PUTTY IS APPLIED.
8. PACKAGED ANODE INSTALLATION: A PACKAGED ANODE SHALL BE INSTALLED IN AN EXCAVATED HOLE ON EITHER SIDE OF THE PIPE. IT SHALL BE INSTALLED IN A POSITION SUCH THAT ANY PART OF THE MAGNESIUM ANODE IS A MINIMUM DISTANCE OF 5 FEET FROM THE PIPE SURFACE. THE PACKAGED ANODE SHALL BE BACKFILLED SUCH THAT A MINIMUM OF 6 INCHES OF NATIVE SOIL, COMPACTED FIRM, SURROUNDS IT IN THE EXCAVATION HOLE. AFTER BACKFILLING, WET THE INSTALLATION AREA WITH WATER TO SATURATION. THE ANODE CABLE SHALL BE ROUTED IN PVC CONDUIT TO EITHER A PIPELINE CONNECTION LOCATION OR A TEST STATION METER BOX, DEPENDING ON THE PACKAGED ANODE'S USAGE.
9. CATHODIC PROTECTION TEST STATION INSTALLATION: A CATHODIC PROTECTION TEST STATION SHALL BE NEAREST WELDED JOINT OF THE PIPELINE TO THE SURVEY STATION LOCATION INDICATED A CATHODIC PROTECTION TEST STATION SHALL BE INSTALLED IN ACCORDANCE WITH NOTES 7 AND 8 ABOVE AND THE RELATED DETAIL DRAWINGS.
10. THE CONTRACTOR SHALL PROCURE A ONE-GALLON SOIL SAMPLE AT THE SURVEY STATION LOCATIONS OF THE BEGINNING AND ENDING OF PIPELINE CONNECTION POINTS AND EACH ANODE STATION OR CATHODIC PROTECTION TEST STATION INSTALLATION LOCATION. THE SAMPLES SHALL BE TAKEN AT THE APPROXIMATE SPRING LINE ELEVATION OF THE INSTALLED PIPELINE. THE SAMPLES SHALL BE PROVIDED TO THE ENGINEER.
11. THE CORROSION PROTECTION SPECIALIST SHALL TEST ALL WELDED CABLE CONNECTIONS FOR ADHESION PRIOR TO BACKFILLING OF THE INSTALLED PIPELINE.
12. THE CORROSION PROTECTION SPECIALIST SHALL TEST INSULATED JOINTS FOR CONDUCTIVITY BEFORE THEY ARE INSTALLED, AFTER THE PIPELINE IS BACKFILLED, AND AFTER ALL CONNECTIONS TO EXISTING PIPELINES HAVE BEEN MADE.
13. THE CORROSION PROTECTION SPECIALIST SHALL PERFORM POTENTIAL TESTS AT EACH CATHODIC PROTECTION TEST STATION AFTER ALL CONNECTIONS TO THE PIPELINE ARE MADE AND IT IS COMPLETELY BACKFILLED. POTENTIAL TESTS SHALL BE TAKEN OF EACH TEST CABLE PRIOR TO CONNECTION TO THE TERMINAL BOARD AND OF EACH TERMINAL BOARD TEST POINT AFTER CABLE CONNECTIONS HAVE BEEN MADE.
14. THE CONTRACTOR SHALL PROVIDE THE ENGINEER WITH A REPORT, PREPARED BY THE CATHODIC PROTECTION SPECIALIST, OF ALL TESTS CONDUCTED FOR THE CONTRACT WORK WHICH INCLUDES TEST DATA, TEST RESULTS, DISCUSSION, AND RECOMMENDATIONS.

SRJV
FEB 20 2013
ISSUED FOR CONSTRUCTION

REV	DATE	BY	APP	REG NO	EXPIRES	SEAL HOLDER	DESCRIPTION
0	11/21/12	KY	RG	C74831	12/31/13	RAFAEL GONZALEZ	APPROVED FOR CONSTRUCTION

DESIGNED BY K. YAMAKAWA
DRAWN BY K. YAMAKAWA
CHECKED BY R. GONZALEZ
IN CHARGE R. GONZALEZ
DATE 11/21/12

REGISTERED PROFESSIONAL ENGINEER RAFAEL GONZALEZ No. C74831 Exp. 12-31-13 CIVIL STATE OF CALIFORNIA

Exposition Metro Line Construction Authority
Expo
EXPO SKANSKA RADOS
444 South Flower Street
Suite 2200
Los Angeles, CA 90071
TEL (213) 443-7463
FAX (213) 362-9481

Exposition Construction Authority
Approved for Construction
Drawings - AFC
FEB 19 2013

PARSONS BRINCKERHOFF

EXPOSITION LRT PROJECT- PHASE 2
WATER RELOCATION
CATHODIC PROTECTION DETAILS

CONTRACT NO XP8902-002
DRAWING NO UW-3C-502 REV 0
SCALE NO SCALE
SHEET NO 65 OF 108

gonzalezr 4:01:46 PM 11/21/2012
Plot Driver=EXPO2-Half-BW-pdf.plt
Pentable=EXPO2-PENTABLE.tbl
C:\EXPO2\Batch Plot\3C\expo2-UW-3C-502.plg

SCALES HORIZ SCALE: VERT SCALE:
SHEET
INDEX NUMBER

CURRENT STATUS

Sheet Version 2.dft

REVISION DATES (DESIGN STREC ONLY)

NO.	DATE	BY	DESCRIPTION

REVISIONS

APPROVED

CITY

CITY DRAWING NO. U9211
SHEET NO.: 65 OF 108
DATE 1-15 2013
APPROVED BY
SUBMITTED BY:
REFERENCE :
REVIEWED : DATE : 20__
REVIEWED : DATE : 20__
RE-REVIED : DATE 1-15 2013

LEON P. SWAN, P.E., CITY ENGINEER
ENGINEERING

City of Santa Monica
Department of Public Works
1437 4th Street, Suite 300 Santa Monica, CA 90401
TEL. (310)458-8721 FAX. (310)393-4425
e-mail : smengineering@smgov.net

Plotted by: gonzalezr 11/21/2012 C:\EXPO2\Batch Plot\3C\expo2-UW-3C-502.plg

EXPOSITION METRO LINE CONSTRUCTION AUTHORITY

Expo

EXPOSITION LIGHT RAIL TRANSIT PROJECT- PHASE 2

RECLAIMED WATER RELOCATIONS FOR SEGMENT 3C

RFEC
AH 11/6/12

TEMPORARY REDLINE
DO NOT INCORPORATE

SHT NO.	DRAWING NO.	SHEET TITLE
1.	URW-3C-101 R/C	RECLAIMED WATER RELOCATION VICINITY MAP & KEYMAP
2.	URW-3C-102 R/C	RECLAIMED WATER RELOCATION CONSTRUCTION NOTES
3.	URW-3C-201 R/C	RECLAIMED WATER RELOCATION PLAN & PROFILE COLORADO AVE STA 9+50 TO STA 13+00
4.	URW-3C-202 R/C	RECLAIMED WATER RELOCATION PLAN & PROFILE COLORADO AVE STA 13+00 TO STA 16+50
5.	URW-3C-203	RECLAIMED WATER RELOCATION PLAN & PROFILE COLORADO AVE STA 16+50 TO STA 20+00
6.	URW-3C-204	RECLAIMED WATER RELOCATION PLAN & PROFILE COLORADO AVE STA 20+00 TO STA 23+50
7.	URW-3C-301	RECLAIMED WATER RELOCATION CROSS SECTIONS
8.	URW-3C-401	RECLAIMED WATER RELOCATION CONNECTION DETAILS
9.	URW-3C-501	RECLAIMED WATER RELOCATION MISCELLANEOUS DETAILS
10.	URW-3C-502	RECLAIMED WATER RELOCATION CATHODIC PROTECTION DETAILS 1 OF 2
11.	URW-3C-503	RECLAIMED WATER RELOCATION CATHODIC PROTECTION DETAILS 2 OF 2

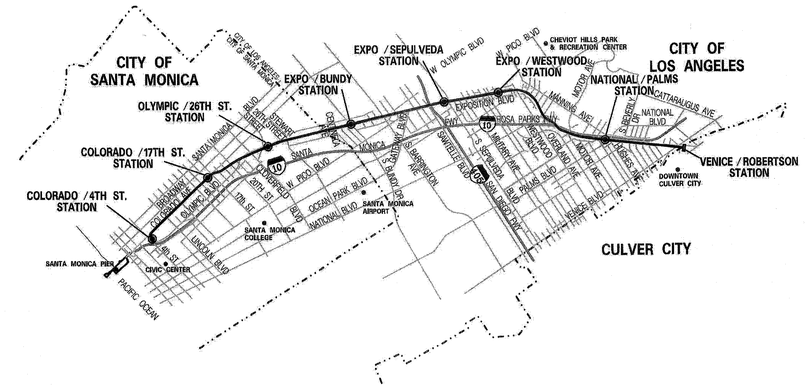

VICINITY MAP

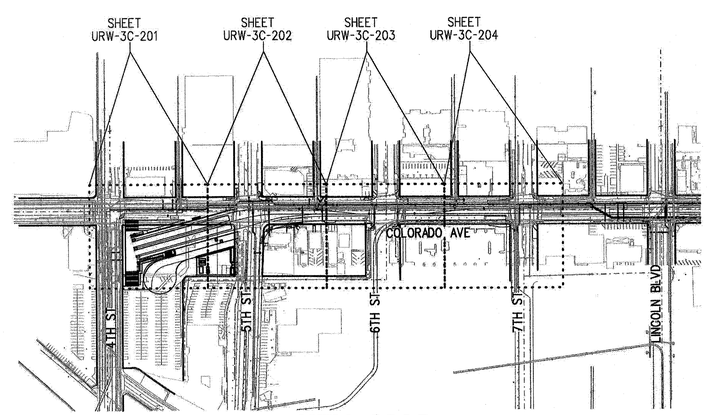

KEY MAP

SRJV
MAY 10 2013
ISSUED FOR CONSTRUCTION

REV	DATE	BY	APP	REG NO	EXPIRES	SEAL HOLDER	DESCRIPTION
0	10/19/12	KY	RG	C74831	12/31/13	RAFAEL GONZALEZ	APPROVED FOR CONSTRUCTION

DESIGNED BY K. YAMAKAWA
DRAWN BY K. YAMAKAWA
CHECKED BY R. GONZALEZ
IN CHARGE R. GONZALEZ
DATE 10/19/12

REGISTERED PROFESSIONAL ENGINEER
RAFAEL GONZALEZ
No. C74831
Exp. 12-31-13
CIVIL
STATE OF CALIFORNIA

Exposition Metro Line Construction Authority
Expo

EXPO SKANSKA RADOS
444 South Flower Street
Suite 2200
Los Angeles, CA 90071
TEL (213) 443-7463
FAX (213) 362-9481

PARSONS BRINCKERHOFF

CURRENT STATUS

EXPOSITION LRT PROJECT- PHASE 2
RECLAIMED WATER RELOCATION
VICINITY MAP & KEY MAP

Exposition Construction Authority
Approved for Construction
Drawings - AFC
APR 15 2013

CONTRACT NO XP8902-002
DRAWING NO URW-3C-101 REV 0
SCALE NO SCALE
SHEET NO 66 OF 108

gonzalezr 10:57:38 AM 10/19/2012
Plot Driver=EXPO2-Full-BW-pdf.plt
Pentable=EXPO2-PENTABLE.tbl
C:\EXPO2\Batch Plot\3C\expo2-URW-3C-101.plg

SCALES | HORIZ SCALE: | VERT SCALE: | SHEET | INDEX NUMBER

REVISION DATES (DESIGN STAGE ONLY)

Sheet Version 2.01

REFERENCE :
SUBMITTED BY: Doug DeVinnie
APPROVED BY: Leon E. Swain, P.E., CITY ENGINEER
CITY DRAWING NO. U9212
SHEET NO. 66 OF 108
DATE : 11-01 2012
ENGINEERING

REVIEWED : DATE : 20
REVIEWED : DATE : 20
REVIEWED : DATE : 11-01 2012
CITY

NO.	DATE	BY	DESCRIPTION	APPROVED

REVISIONS

City of Santa Monica
Department of Public Works
1437 4th Street, Suite 300 Santa Monica, CA 90401
TEL. (310)458-8721 FAX. (310)393-4425
e-mail : smengineering@smgov.net

Plotted by: gonzalezr 10/19/2012 C:\EXPO2\Batch Plot\3C\expo2-URW-3C-101.plg

CONSTRUCTION NOTES

1. PIPE MATERIALS AND INSTALLATION SHALL BE IN ACCORDANCE WITH THESE CONSTRUCTION DOCUMENTS, THE MANUFACTURER'S RECOMMENDATIONS AND APPROVED SPECIFICATIONS.
2. ALL RECLAIMED WATER MAIN SHALL BE ~~DUCTILE IRON PIPE, PRESSURE CLASS 350,~~ PVC DR-14 PC 305 (W/FITTINGS PER NOTES) IN CONFORMANCE WITH AWWA C151, UNLESS SHOWN OTHERWISE ON PLANS. RECLAIMED WATER PIPE SHALL BE PURPLE IN COLOR.
3. ALL FITTINGS AND MECHANICAL JOINTS SHALL BE DUCTILE IRON AND CONFORM TO AWWA C110 WITH A WORKING PRESSURE OF 350 PSI UNLESS OTHERWISE NOTED OR DIRECTED BY THE ENGINEER.
4. FLANGED DUCTILE IRON PIPE SHALL BE CLASS 150 IN CONFORMANCE WITH AWWA C110 WITH A MINIMUM WORKING PRESSURE OF 250 PSI.
5. ALL RESTRAINED JOINTS AS SHOWN SHALL BE CONSTRUCTED WITH MECHANICAL JOINT RESTRAINTS (MEGALUG GLANDS OR APPROVED EQUIVALENT).
6. ALL DUCTILE IRON PIPE AND FITTINGS SHALL BE LINED WITH CEMENT MORTAR PER AWWA C104.
7. MAXIMUM JOINT DEFLECTION FOR RESTRAINED, MECHANICAL JOINT, DUCTILE IRON PIPE IS 2.5°.
8. COVER OVER TOP OF WATER MAIN SHALL BE 3'-0" MIN. UNLESS SHOWN OTHERWISE IN THE PLANS.
9. ALL RECLAIMED WATER MAIN PIPE SHALL MAINTAIN MINIMUM 2'-0" HORIZONTAL CLEARANCE (OUTSIDE DIAMETER TO OUTSIDE DIAMETER) BETWEEN ALL EXISTING AND PROPOSED SEWER LINES.
10. THE CONTRACTOR SHALL ADJUST ALL VALVE SLEEVES TO FINISH GRADE UPON COMPLETION OF REPAVING. INSTALL VALVE STEM RISERS WHERE REQUIRED FOR RECLAIMED WATER LINES WHEN DEPTH TO OPERATING NUT EXCEEDS 60" PER CITY OF SANTA MONICA STD. DETAIL SMW 14.
11. ALL RECLAIMED WATER LINE INSTALLATIONS SHALL BE CHLORINATED IN ACCORDANCE WITH THE STATE OF CALIFORNIA HEALTH DEPARTMENT, CONSISTING OF NOT LESS THAN 50 PPM INITIAL DOSAGE, WITH NOT LESS THAN 25 PPM RESIDUAL DOSAGE AFTER 24 HOURS AND ALLOWED TO STAND. INSTALLATIONS SHALL BE FLUSHED AND A 48-HOUR BACTI TEST SHALL BE CONDUCTED FOLLOWING PRESSURE AND LEAKAGE TESTING. ALL TESTING METHODS SHALL BE SUBJECT TO APPROVAL BY THE CITY.
12. ALL VALVES, AIR RELEASE ASSEMBLIES AND OTHER ASSOCIATED FACILITIES SHALL BE LOCATED IN THE FIELD AS DIRECTED BY THE CITY. THE LOCATION SHOWN ON THESE PLANS ARE APPROXIMATE.
13. WHERE "ABANDON OR EXISTING MAIN" APPEARS ON PLAN, CONTRACTOR SHALL CUT AND PLUG PER CITY OF SANTA MONICA STD DETAIL SMW 18.
14. WHERE EXISTING AIR RELEASE LATERAL/ASSEMBLIES TO BE ABAN, LATERAL TO BE CUT AND CAPPED 3 FEET BELOW GROUND; SURFACE COMPONENTS TO BE REMOVED.
15. CONTRACTOR SHALL INSTALL BY-PASS LINES PER PLANS AND SPECIFICATIONS. THE MINIMUM BY-PASS PIPING SIZE SHALL EQUAL THE SIZE OF THE MAIN TO BE REPLACED.
16. THE CONTRACTOR SHALL "POTHOLE FOR TIE IN" PRIOR TO CONSTRUCTION TO FIELD VERIFY THE ACTUAL TIE IN CONNECTION TO THE EXISTING RECLAIMED WATER SYSTEM. THE TIE IN WILL BE APPROVED BY THE CITY PRIOR TO CONSTRUCTION.
17. BYPASS RECLAIMED WATER PLANS SHALL BE PROVIDED BY THE CONTRACTOR FOR ALL RECLAIMED WATER MAINS TO BE REMOVED AND REPLACED AS SHOWN OR REQUIRED. ALL BYPASS PLANS SHALL BE IN ACCORDANCE WITH THE PROJECT SPECIFICATIONS AND COORDINATED AND APPROVED WITH THE CITY FIRE MARSHALL.
18. THE CONTRACTOR SHALL MAKE EXPLORATORY EXCAVATIONS A MINIMUM DISTANCE OF 100 FEET IN ADVANCE OF TRENCHING TO DETERMINE THE EXACT LOCATION AND DEPTH OF ALL UTILITIES CROSSING THE WATER MAIN ALONG COLORADO AVENUE. PIPE JOINTS SHALL BE DEFLECTED PER MANUFACTURER RECOMMENDATION TO CLEAR INTERFERENCE WITH KNOWN OBSTRUCTIONS OR OTHER UTILITIES WHICH ARE SHOWN ON THE PLANS UNLESS OTHERWISE DIRECTED BY THE ENGINEER.
19. IF RETURNING TO TRAFFIC OPERATIONS. IMMEDIATELY AFTER THE COMPLETION OF BACKFILLING, A THREE (3) INCH LAYER OF TEMPORARY ASPHALT PAVEMENT, THE MIX THEREOF APPROVED BY THE ENGINEER, SHALL BE PLACED AND ROLLED OVER THE BACKFILL.
20. ALL SANITARY SEWER LATERALS THAT ARE FOUND IN CONFLICT WITH THE PROPOSED PIPELINE SHALL BE RECONSTRUCTED AND RECONNECTED WITH MINIMUM DISRUPTION OF SEWER SERVICE. THE CONTRACTOR SHALL CONTACT PUBLIC WORKS - ENGINEERING DIVISION FOR SPECIAL INSPECTION BEFORE PERFORMING SUCH WORK.
21. EXACT LOCATIONS, MATERIALS AND SIZE OF RECLAIMED WATER SERVICES SHALL BE FIELD VERIFIED. ANY MATERIALS AND SIZES DEVIATING FROM PLANS SHALL BE CONVEYED TO THE ENGINEER IN WRITING.

RFEC PER RFI-10049 11/6/12

CONSTRUCTION NOTES (CONTINUED)

22. MECHANICAL THRUST RESTRAINTS SHALL BE INSTALLED EITHER SIDE OF ALL NEW VALVES.
23. ALL NEW AND EXISTING RECLAIMED WATER MAINS SHALL BE PROPERLY RESTRAINED BY THE CONTRACTOR.
24. NO MECHANICAL EQUIPMENT IS PERMITTED TO OPERATE WITHIN THREE FEET OF A GAS LINE AND ANY CLOSER WORK MUST BE DONE BY HAND.
25. ALL RECLAIMED WATER MAINS SHALL BE PROPERLY RESTRAINED BY THE CONTRACTOR DURING ALL HYDROSTATIC TESTING.
26. AIR RELEASE VALVES SHALL BE INSTALLED PER CITY OF SANTA MONICA STD DETAILS SMW 21 AND 22.
27. ALL GATE VALVES SHALL BE INSTALLED PER CITY OF SANTA MONICA STD DETAILS SMW 3, 12, AND 13.
28. FOR RECLAIMED WATER PIPE BEDDING DETAILS, REFER TO CITY OF SANTA MONICA STD. DETAIL SMW 1. ADDITIONALLY, CITY OF SANTA MONICA STD DETAIL SMW 1 WILL BE USED FOR STEEL PIPE TRENCH.
29. ALL DUCTILE IRON PIPE SHALL BE WAX-TAPE COATED. ~~& JOINT BONDED TO MAINTAIN ELECTRICAL CONTINUITY AND CATHODICALLY PROTECTED BY ANODES AS SHOWN ON THESE PLANS AND APPROVED SPECIFICATIONS.~~

SYMBOL LEGEND

○	EXISTING VALVE
▯	METER BOX
⊗	PROP GATE VALVE
⊢⊣	TEE
#	RJ COUPLING/COUPLING ADAPTOR
⊙	AIR RELEASE ASSEMBLY
⌐	RJ BEND (HORIZ OR ROLLED)
⌐	RJ BEND (VERT)
⫼	INSULATION JOINT
ANODE	APPROXIMATE ANODE LOCATION
GCPTS-1	GCPTS W/ TYPE 1 CONFIGURATION *
GCPTS-2	GCPTS W/ TYPE 2 CONFIGURATION *
GCPTS-3	GCPTS W/ TYPE 3 CONFIGURATION *

* *NOTE:*
APPROXIMATE LOCATION;
FIELD VERIFICATION REQUIRED

ABBREVIATIONS

ABAN	TO BE ABANDONED
ABND	EXISTING ABANDONED
ACP	ASBESTOS CEMENT PIPE
AR	AIR/VACUUM RELEASE
CB	CATCH BASIN
CIP	CAST IRON PIPE
℄	CENTER LINE
C/S	COMMUNICATION/SYSTEMS
CSC	CONCRETE STEEL CYLINDER
CSM	CITY OF SANTA MONICA
DCL&C	DOUBLE CEMENT LINED AND COATED
DIP	DUCTILE IRON PIPE
DI	DROP INLET
DR	DIMENSION RATIO
E	EAST
EA	EACH
ELEC	ELECTRICAL
EX	EXISTING
FH	FIRE HYDRANT
FO	FIBER OPTICS
FE	FLANGED END
G	GAS LINE
GV	GATE VALVE
GCPTS	GALVANIC CATHODIC PROTECTION TEST STATION
HORIZ	HORIZONTAL
INV	INVERT
IRRIG	IRRIGATION
LF	LINEAR FOOT
LS	LUMP SUM
LT	LEFT
MJ	MECHANICAL JOINT
PE	PLAIN END
PP	POWER POLE
PRE-ASSD	PRE-ASSEMBLED
PROP	PROPOSED
PVC	POLYVINYL CHLORIDE
QTY	QUANTITY
RCP	REINFORCED CONCRETE PIPE
RJ	RESTRAINED JOINT
RT	RIGHT
RW	RECLAIMED WATER
R/W	RIGHT OF WAY
SCE	SOUTHERN CALIFORNIA EDISON
SD	STORM DRAIN
SDMH	STORM DRAIN MANHOLE
SS	SANITARY SEWER
STA	STATION
STD	STANDARD
STL	STEEL
T	TELEPHONE
T/R	TOP OF RAIL
UD	UNDERDRAIN
VERT	VERTICAL
W	WATER MAIN, WEST
WM	WATER METER
WS	WATER SERVICE
WV	WATER VALVE

SRJV
MAY 10 2013
ISSUED FOR CONSTRUCTION

REV	DATE	BY	APP	REG NO	EXPIRES	SEAL HOLDER	DESCRIPTION
0	10/19/12	KY	RG	C74831	12/31/13	RAFAEL GONZALEZ	APPROVED FOR CONSTRUCTION

REVISION DATES: DESIGN SINCE (MM/YY)

DESIGNED BY K. YAMAKAWA
DRAWN BY K. YAMAKAWA
CHECKED BY R. GONZALEZ
IN CHARGE R. GONZALEZ
DATE 10/19/12

REGISTERED PROFESSIONAL ENGINEER — RAFAEL GONZALEZ — No. C74831 — Exp. 12-31-13 — CIVIL — STATE OF CALIFORNIA

Exposition Metro Line Construction Authority
Expo
EXPO SKANSKA RADOS
444 South Flower Street
Suite 2200
Los Angeles, CA 90071
TEL (213) 443-7463
FAX (213) 362-9481

PARSONS BRINCKERHOFF

CURRENT STATUS

EXPOSITION LRT PROJECT- PHASE 2
RECLAIMED WATER RELOCATION
CONSTRUCTION NOTES
Exposition Construction Authority
Approved for Construction
Drawings - AFC
APR 15 2013

CONTRACT NO XP8902-002
DRAWING NO URW-3C-102 REV 0
SCALE NO SCALE
SHEET NO 67 OF 108

gonzalezr 11:15:11 AM 10/19/2012
Plot Driver=EXPO2-PDF-Full-BW.plt Pentable=EXPO2-PENTABLE.TBL c:\projectwise\pb\projectwiseint\gonzalezr\dms09108\expo2-URW-3C-102.plg

SCALES HORIZ SCALE: VERT SCALE: SHEET INDEX NUMBER

Sheet Version 2.01

NO.	DATE	BY	DESCRIPTION

REVISIONS

APPROVED CITY

REVIEWED: DATE: 20__ REVIEWED: DATE: 20__ REVIEWED: DATE: 20__ ENG DATE: 11-01 2012

REFERENCE: SUBMITTED BY: Doug DeLaine CITY DRAWING NO. U9212 SHEET NO. 67 OF 108 APPROVED BY: LEON E. SWAIN, P.E., CITY ENGINEER DATE: 11-01 2012 ENGINEERING

City of Santa Monica
Department of Public Works
1437 4th Street, Suite 300 Santa Monica, CA 90401
TEL. (310)458-8721 FAX. (310)393-4425
e-mail : smengineering@smgov.net

Plotted by: gonzalezr 10/19/2012 c:\projectwise\pb\projectwiseint\gonzalezr\dms09108\expo2-URW-3C-102.plg

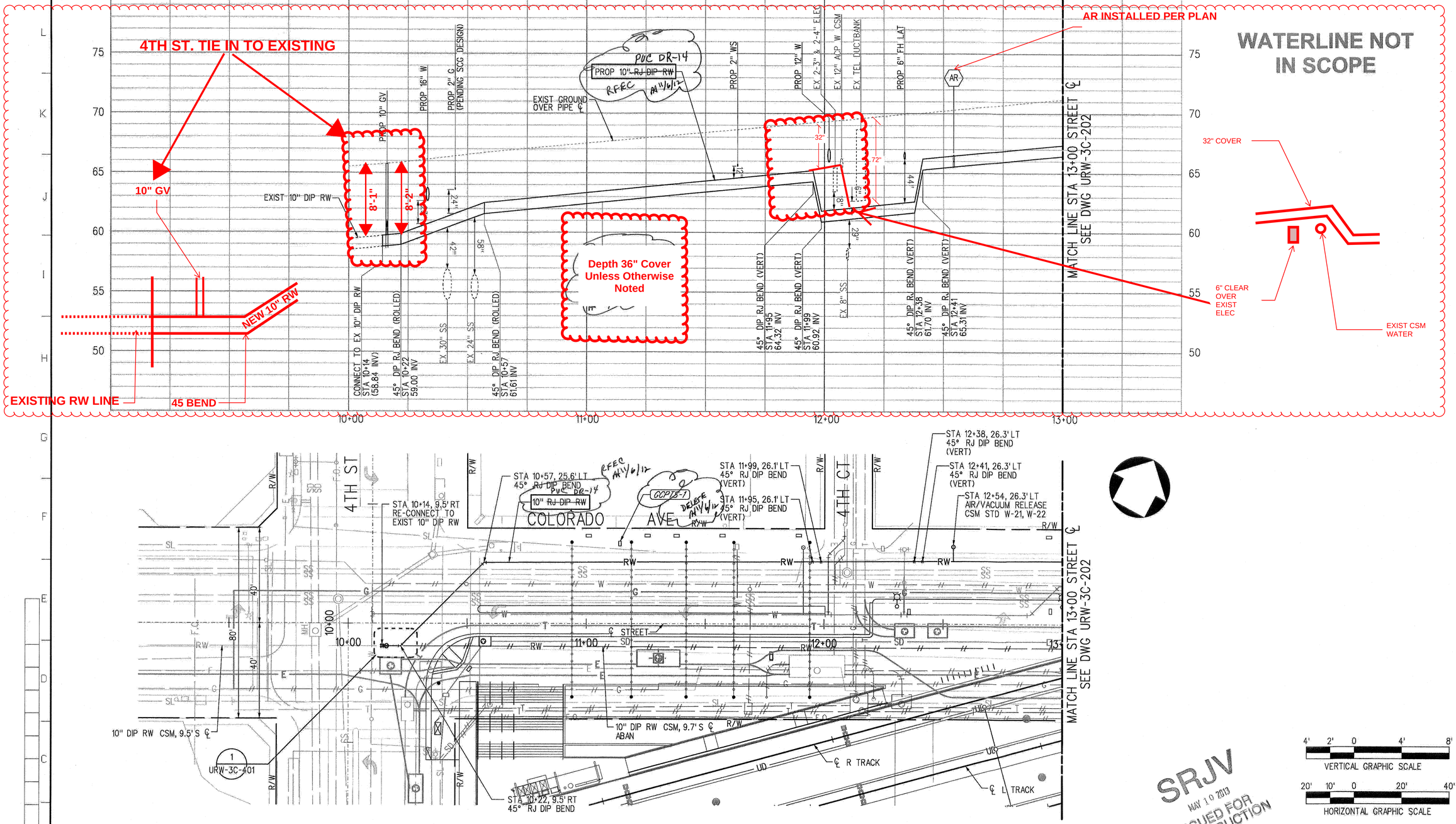

REV	DATE	BY	APP	REG NO	EXPIRES	SEAL HOLDER	DESCRIPTION
0	10/19/12	KY	RG	C74831	12/31/13	RAFAEL GONZALEZ	APPROVED FOR CONSTRUCTION

DESIGNED BY K. YAMAKAWA
DRAWN BY K. YAMAKAWA
CHECKED BY R. GONZALEZ
IN CHARGE R. GONZALEZ
DATE 10/19/12

REGISTERED PROFESSIONAL ENGINEER RAFAEL GONZALEZ No. C74831 Exp. 12-31-13 CIVIL STATE OF CALIFORNIA

Exposition Metro Line Construction Authority
Expo
EXPO SKANSKA RADOS
444 South Flower Street
Suite 2200
Los Angeles, CA 90071
TEL (213) 443-7463
FAX (213) 362-9481

PARSONS BRINCKERHOFF
CURRENT STATUS

EXPOSITION LRT PROJECT- PHASE 2
RECLAIMED WATER RELOCATION
PLAN & PROFILE
COLORADO AVE
STA 9+50 TO STA 13+00

Exposition Construction Authority Approved for Construction Drawings - AFC
APR 15 2013

CONTRACT NO XP8902-002
DRAWING NO URW-3C-201 REV 0
SCALE HOR: 1"=20' VERT: 1"=4'
SHEET NO 68 OF 108

gonzalezr 10:59:51 AM 10/18/2012
Plot Driver=EXPO2-Full-BW-pdf.plt Pentable=EXPO2-PENTABLE.tbl
C:\EXPO2\Batch Plot\3C\expo2-URW-3C-201.plg

SCALES HORIZ SCALE: 1"=20' VERT SCALE: 1"=4'
SHEET
INDEX NUMBER

City of Santa Monica
Department of Public Works
1437 4th Street, Suite 300 Santa Monica, CA 90401
TEL. (310)458-8721 FAX. (310)393-4425
e-mail : smengineering@smgov.net

C:\EXPO2\Batch Plot\3C\expo2-URW-3C-201.plg
Plotted by: gonzalezr 10/18/2012

REVISION DATES (DESIGN STAGE ONLY)
Sheet Version 2.01

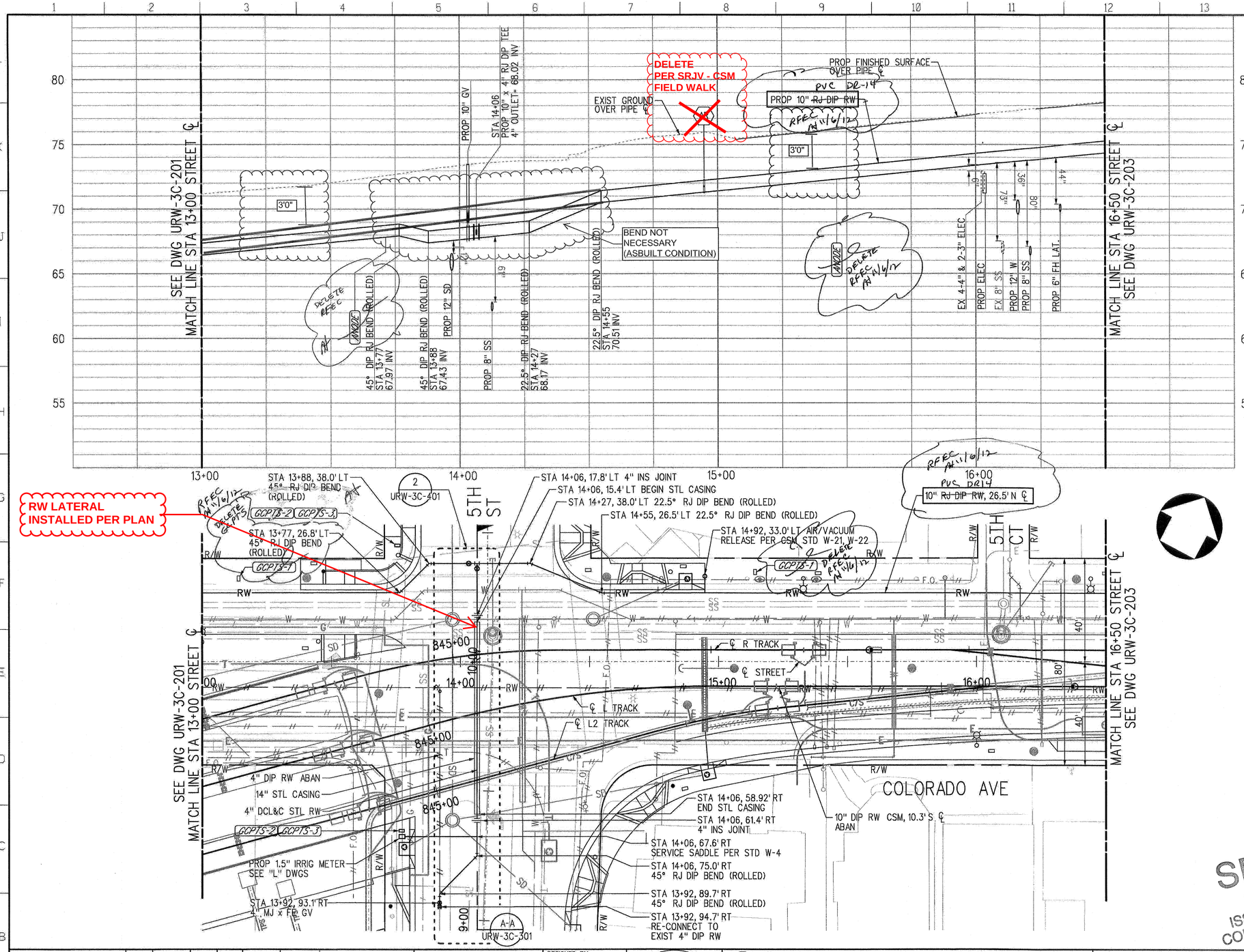

SRJV
MAY 10 2013
ISSUED FOR CONSTRUCTION

4' 2' 0 4' 8'
VERTICAL GRAPHIC SCALE

20' 10' 0 20' 40'
HORIZONTAL GRAPHIC SCALE

REV	DATE	BY	APP	REG NO	EXPIRES	SEAL HOLDER	DESCRIPTION
0	10/19/12	KY	RG	C74831	12/31/13	RAFAEL GONZALEZ	APPROVED FOR CONSTRUCTION

REVISION DATES (DESIGN STAGE ONLY)

DESIGNED BY K. YAMAKAWA
DRAWN BY K. YAMAKAWA
CHECKED BY R. GONZALEZ
IN CHARGE R. GONZALEZ
DATE 10/19/12

REGISTERED PROFESSIONAL ENGINEER — RAFAEL GONZALEZ — No. C74831 — Exp. 12-31-13 — CIVIL — STATE OF CALIFORNIA

Exposition Metro Line Construction Authority
Expo
EXPO SKANSKA RADOS
444 South Flower Street
Suite 2200
Los Angeles, CA 90071
TEL (213) 443-7463
FAX (213) 362-9481

PARSONS BRINCKERHOFF

CURRENT STATUS

Exposition Construction Authority
Approved for Construction
Drawings - AFC
APR 15 2013

EXPOSITION LRT PROJECT- PHASE 2
RECLAIMED WATER RELOCATION
PLAN & PROFILE
COLORADO AVE
STA 13+00 TO STA 16+50

CONTRACT NO XP8902-002
DRAWING NO URW-3C-202 REV 0
SCALE HOR: 1"=20' VERT: 1"=4'
SHEET NO 69 OF 108

SCALES: HORIZ SCALE: 1"=20' VERT SCALE: 1"=4'
SHEET
INDEX NUMBER

gonzalezr 4:21:46 PM 10/31/2012
Plot Driver=EXPO2-PDF-Full-BW.plt
Pentable=EXPO2-PENTABLE.TBL
c:\projectwise\pb\projectwiseint\gonzalezr\dms09108\expo2-URW-3C-202.plg

Sheet Version 2dl

City of Santa Monica
Department of Public Works
1437 4th Street, Suite 300 Santa Monica, CA 90401
TEL. (310)458-8721 FAX. (310)393-4425
e-mail : smengineering@smgov.net

CITY DRAWING NO. U9212
SHEET NO. 69 OF 108
DATE : 11-01 2012
LEON E. SWAIN, P.E., CITY ENGINEER
ENGINEERING

REFERENCE :
SUBMITTED BY:
APPROVED BY:
REVIEWED : DATE : 20
REVIEWED : DATE : 20
REVIEWED : DATE : 11-01 2012
CITY

NO. DATE BY DESCRIPTION
REVISIONS
APPROVED

Plotted by: gonzalezr 10/31/2012 c:\projectwise\pb\projectwiseint\gonzalezr\dms09108\expo2-URW-3C-202.plg

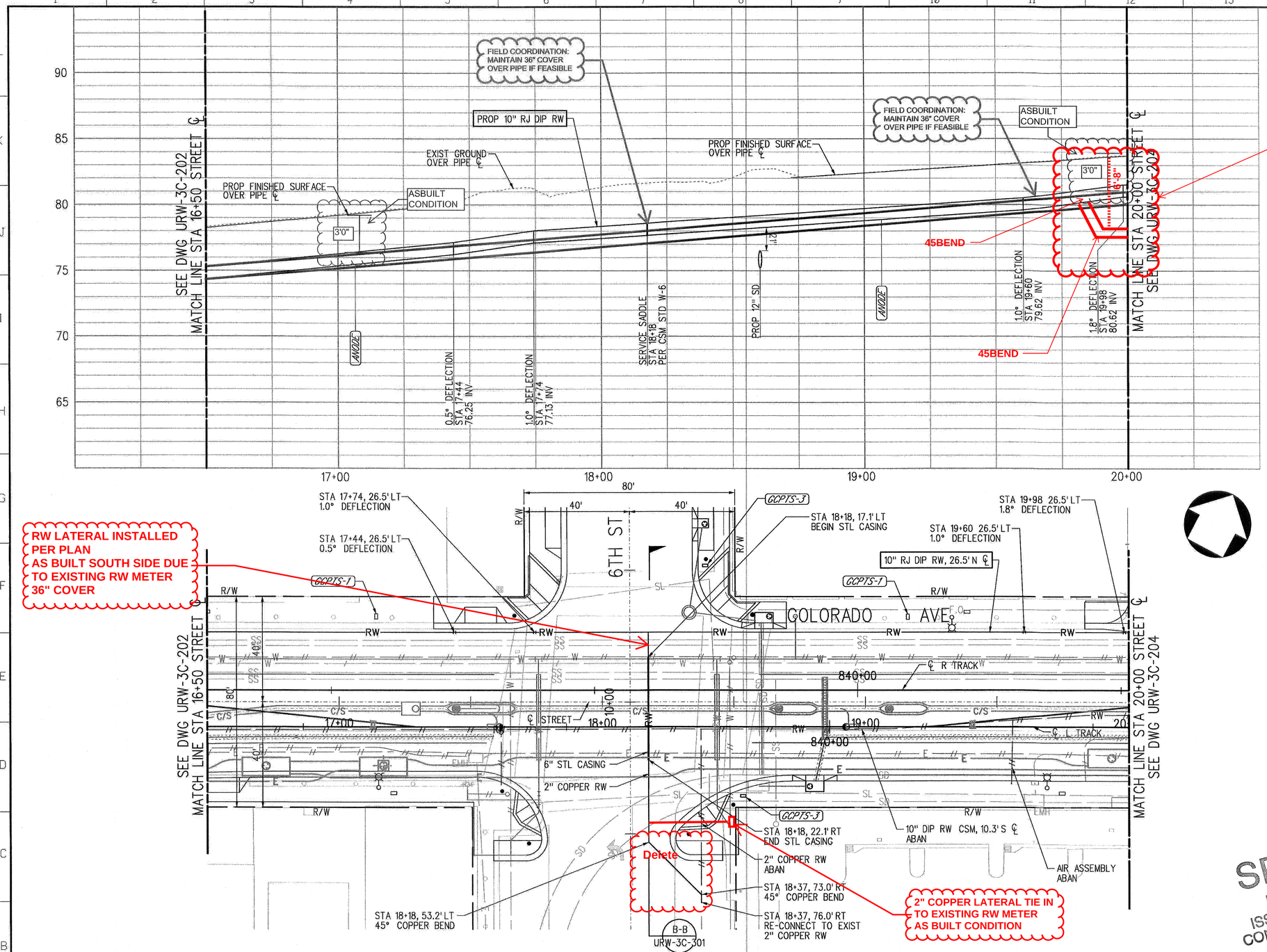

SRJV
MAY 10 2013
ISSUED FOR CONSTRUCTION

REV	DATE	BY	APP	REG NO	EXPIRES	SEAL HOLDER	DESCRIPTION
0	10/19/12	KY	RG	C74831	12/31/13	RAFAEL GONZALEZ	APPROVED FOR CONSTRUCTION

REVISION DATES (DESIGN STAGE ONLY)

DESIGNED BY K. YAMAKAWA
DRAWN BY K. YAMAKAWA
CHECKED BY R. GONZALEZ
IN CHARGE R. GONZALEZ
DATE 10/19/12

REGISTERED PROFESSIONAL ENGINEER — RAFAEL GONZALEZ — NO. C74831 — Exp. 12-31-13 — CIVIL — STATE OF CALIFORNIA

Exposition Metro Line Construction Authority
Expo
EXPO SKANSKA RADOS
444 South Flower Street
Suite 2200
Los Angeles, CA 90071
TEL (213) 443-7463
FAX (213) 362-9481

PARSONS BRINCKERHOFF
CURRENT STATUS

Exposition Construction Authority Approved for Construction Drawings - AFC
APR 15 2013

EXPOSITION LRT PROJECT- PHASE 2
RECLAIMED WATER RELOCATION
PLAN & PROFILE
COLORADO AVE
STA 16+50 TO STA 20+00

CONTRACT NO XP8902-002
DRAWING NO URW-3C-203 REV 0
SCALE HOR: 1"=20' VERT: 1"=4'
SHEET NO 70 OF 108

SCALES HORIZ SCALE: 1"=20' VERT SCALE: 1"=4'
SHEET
INDEX NUMBER

gonzalezr 10:59:53 AM 10/18/2012
Plot Driver=EXPO2-Full-BW-pdf.plt
Pentable=EXPO2-PENTABLE.tbl
C:\EXPO2\Batch Plot\3C\expo2-URW-3C-203.plg

Sheet Version 2.01

City of Santa Monica
Department of Public Works
1437 4th Street, Suite 300 Santa Monica, CA 90401
TEL. (310)458-8721 FAX. (310)393-4425
e-mail : smengineering@smgov.net

REFERENCE :
SUBMITTED BY:
CITY DRAWING NO. U9212
SHEET NO.: 70 OF 108
DATE : 11-13 2012
APPROVED BY: LEON E. SWANN, P.E., CITY ENGINEER, ENGINEERING
REVIEWED : DATE : 20
REVIEWED : DATE : 20
REVIEWED : DATE : 11-13 2012
CITY

NO.	DATE	BY	DESCRIPTION	APPROVED
			REVISIONS	

Plotted by: gonzalezr 10/18/2012 C:\EXPO2\Batch Plot\3C\expo2-URW-3C-203.plg

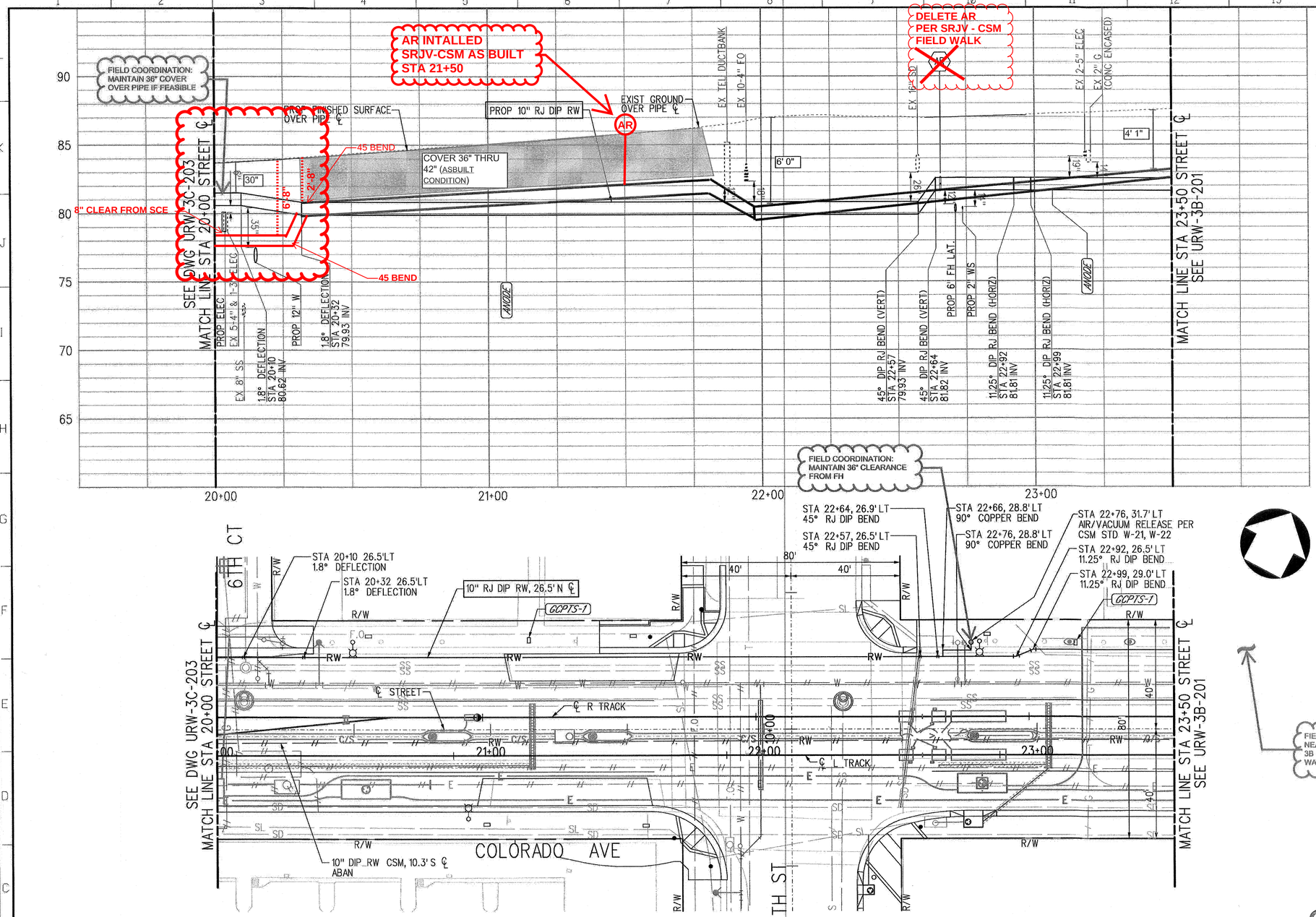

WATERLINE NOT
IN SCOPE

SRJV
MAY 10 2013
ISSUED FOR
CONSTRUCTION

4' 2' 0 4' 8'
VERTICAL GRAPHIC SCALE

20' 10' 0 20' 40'
HORIZONTAL GRAPHIC SCALE

REV	DATE	BY	APP	REG NO	EXPIRES	SEAL HOLDER	DESCRIPTION
0	10/19/12	KY	RG	C74831	12/31/13	RAFAEL GONZALEZ	APPROVED FOR CONSTRUCTION

DESIGNED BY K. YAMAKAWA
DRAWN BY K. YAMAKAWA
CHECKED BY R. GONZALEZ
IN CHARGE R. GONZALEZ
DATE 10/19/12

REGISTERED PROFESSIONAL ENGINEER
RAFAEL GONZALEZ
No. C74831
Exp. 12-31-13
CIVIL
STATE OF CALIFORNIA

Exposition Metro Line Construction Authority
Expo

EXPO SKANSKA RADOS
444 South Flower Street
Suite 2200
Los Angeles, CA 90071
TEL (213) 443-7463
FAX (213) 362-9481

PARSONS BRINCKERHOFF

CURRENT STATUS

Exposition Construction Authority
Approved for Construction
Drawings - AFC
APR 15 2013

EXPOSITION LRT PROJECT- PHASE 2
RECLAIMED WATER RELOCATION
PLAN & PROFILE
COLORADO AVE
STA 20+00 TO STA 23+50

CONTRACT NO XP8902-002
DRAWING NO URW-3C-204 REV 0
SCALE HOR: 1"=20' VERT: 1"=4'
SHEET NO 71 OF 108

gonzalezr 10:59:54 AM 10/18/2012
Plot Driver=EXPO2-Full-BW-pdf.plt Pentable=EXPO2-PENTABLE.tbl
C:\EXPO2\Batch Plot\3C\expo2-URW-3C-204.plg

SCALES HORIZ SCALE: 1"=20' VERT SCALE: 1"=4'
SHEET
INDEX NUMBER

REVISION DATES (DESIGN STAGE ONLY)

Sheet Version 2.01

REFERENCE :
SUBMITTED BY: Doug DeVinnie
APPROVED BY: Leon E. Swain, P.E., CITY ENGINEER
CITY DRAWING NO. U9212
SHEET NO.: 71 OF 108
DATE : 11-13 2012

REVIEWED : DATE : 20
REVIEWED : DATE : 20
REVIEWED : DATE : 11-13 2012
CITY

NO. DATE BY DESCRIPTION APPROVED
REVISIONS

City of Santa Monica
Department of Public Works
1437 4th Street, Suite 300 Santa Monica, CA 90401
TEL. (310)458-8721 FAX. (310)393-4425
e-mail : smengineering@smgov.net

C:\EXPO2\Batch Plot\3C\expo2-URW-3C-204.plg
10/18/2012
Plotted by: gonzalezr

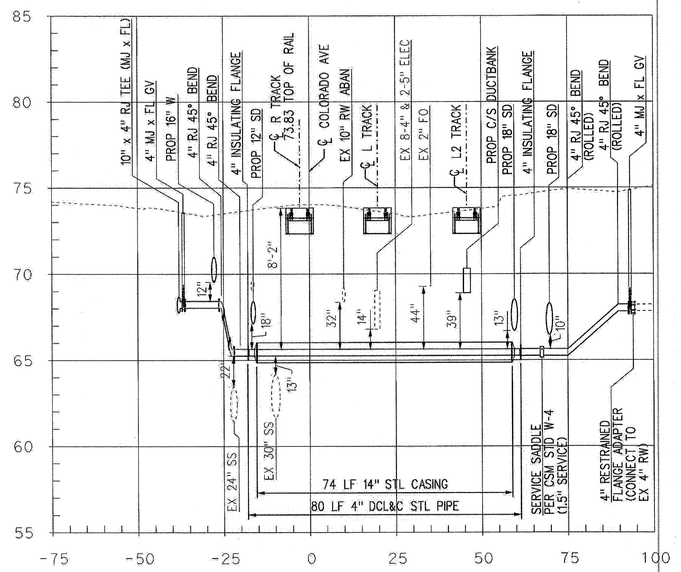

CROSS-SECTION @ 5TH STREET
STA 14+06
HOR: 1" = 20'
VER: 1" = 4'
A-A
URW-3C-202

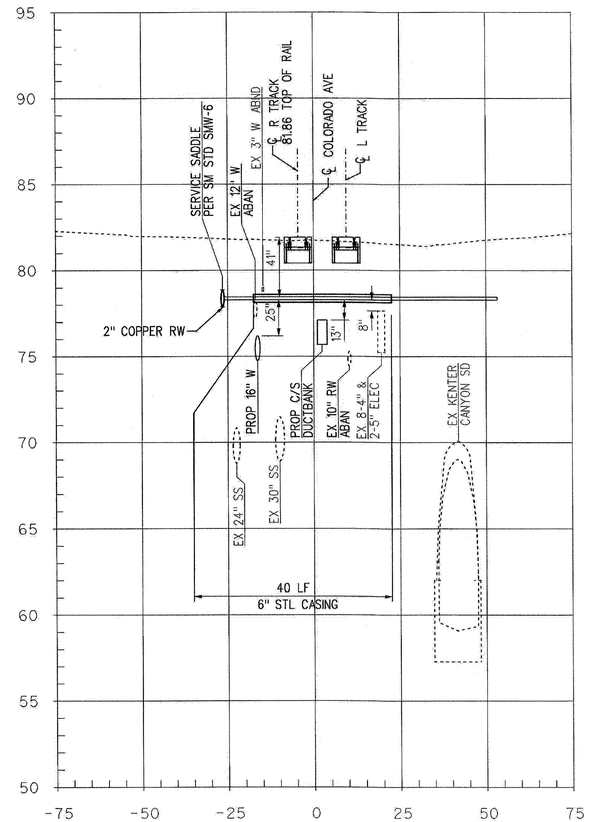

CROSS-SECTION @ 6TH STREET
STA 18+18
HOR: 1" = 20'
VER: 1" = 4'
B-B
URW-3C-203

SRJV
MAY 10 2013
ISSUED FOR CONSTRUCTION

REV	DATE	BY	APP	REG NO	EXPIRES	SEAL HOLDER	DESCRIPTION
0	10/19/12	KY	RG	C74831	12/31/13	RAFAEL GONZALEZ	APPROVED FOR CONSTRUCTION

DESIGNED BY K. YAMAKAWA
DRAWN BY K. YAMAKAWA
CHECKED BY R. GONZALEZ
IN CHARGE R. GONZALEZ
DATE 10/19/12

REGISTERED PROFESSIONAL ENGINEER RAFAEL GONZALEZ No. C74831 Exp. 12-31-13 CIVIL STATE OF CALIFORNIA

Exposition Metro Line Construction Authority
Expo
EXPO SKANSKA RADOS
444 South Flower Street
Suite 2200
Los Angeles, CA 90071
TEL (213) 443-7463
FAX (213) 362-9481
PARSONS BRINCKERHOFF
CURRENT STATUS

EXPOSITION LRT PROJECT- PHASE 2
RECLAIMED WATER RELOCATION
CROSS SECTIONS

Exposition Construction Authority
Approved for Construction
Drawings - AFC
APR 15 2013

CONTRACT NO XP8902-002
DRAWING NO URW-3C-301 REV 0
SCALE NO SCALE
SHEET NO 72 OF 108

gonzalezr 11:00:02 AM 10/18/2012
Plot Driver=EXPO2-Full-BW-pdf.plt
Pentable=EXPO2-PENTABLE.tbl
C:\EXPO2\Batch Plot\3C\expo2-URW-3C-301.plg

SCALES HORIZ SCALE: VERT SCALE:
SHEET
INDEX NUMBER

REVISION DATES (DESIGN STAGE ONLY)

REFERENCE :
SUBMITTED BY: Doug deVinnet
CITY DRAWING NO. U9212
SHEET NO.: 72 OF 108
DATE : 11-13 2012
APPROVED BY: Leon E. Swain, P.E., CITY ENGINEER
ENGINEERING

REVIEWED : DATE : 11-13 2012
REVIEWED : DATE : 20
REVIEWED : DATE : 20
CITY

NO.	DATE	BY	DESCRIPTION	APPROVED

REVISIONS

City of Santa Monica
Department of Public Works
1437 4th Street, Suite 300 Santa Monica, CA 90401
TEL. (310)458-8721 FAX. (310)393-4425
e-mail : smengineering@smgov.net

Plotted by: gonzalezr 10/18/2012 C:\EXPO2\Batch Plot\3C\expo2-URW-3C-301.plg

Sheet Version 2.01

MATERIAL LIST - SHEET URW-3C-201			
ITEM NO.	ITEM	UNIT	QTY
1	10" DIP RESTRAINED FLANGE ADAPTER	EA	1
2	10" DIP; LENGTH AS REQUIRED (MIN L=24")	EA	2
3	10" MJ x FE RESILIENT WEDGE GATE VALVE	EA	1
4	10" MJ RESTRAINT	EA	3
5	10" - RESTRAINING COUPLING	EA	1
6	10" MJ - 45° BEND (ROLLED)	EA	1
7	CONCRETE SEAL	EA	1

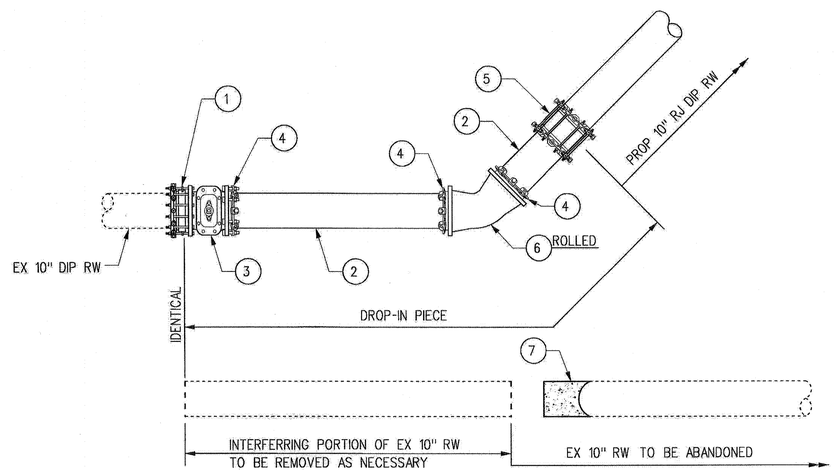

CONNECTION DETAIL 1 URW-3C-201
NO SCALE

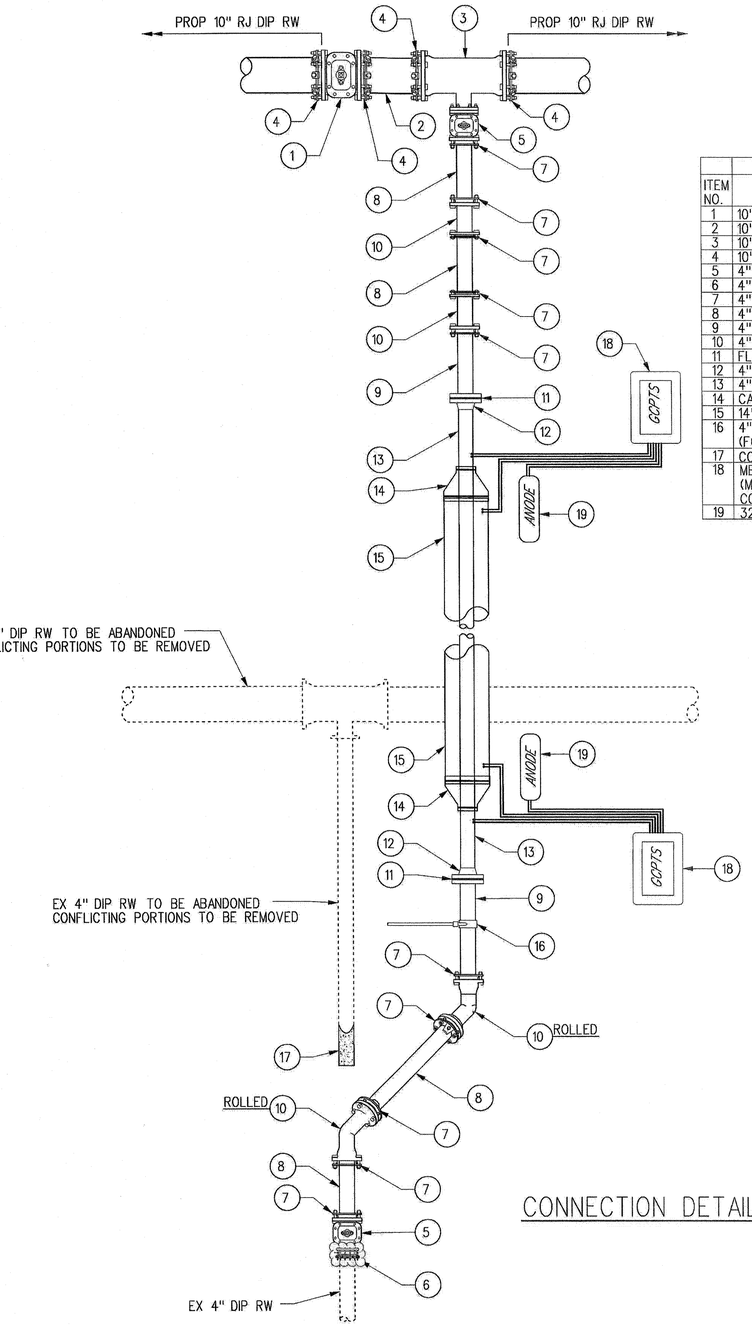

MATERIAL LIST - SHEET URW-3C-202			
ITEM NO.	ITEM	UNIT	QTY
1	10" MJ x MJ RESILIENT WEDGE GATE VALVE	EA	1
2	10" DIP; LENGTH AS REQUIRED (MIN L=24")	EA	1
3	10" x 4" DIP TEE (MJ x FE)	EA	1
4	10" MJ RESTRAINT	EA	4
5	4" MJ x FE RESILIENT WEDGE GATE VALVE	EA	2
6	4" DIP RESTRAINED FLANGED ADAPTER	EA	1
7	4" MJ RESTRAINT	EA	10
8	4" DIP; LENGTH AS REQUIRED (MIN L=24")	EA	4
9	4" DIP (FE x PE)	EA	2
10	4" MJ 45° BEND (ROLLED)	EA	4
11	FLANGE INSULATION KIT	EA	2
12	4" WELDED STL NECK FLANGE	EA	2
13	4" DCL&C STL PIPE (t=0.25")	LF	80
14	CASING END SEAL	EA	2
15	14" STL CASING (t=0.5")	LF	74
16	4" SERVICE SADDLE (FOR 1.5" IRRIG SERVICE)	EA	1
17	CONCRETE SEAL	EA	1
18	METER BOX WITH TWO (2) GCPTS (MAIN & CASING) TERMINAL BOARDS CONTRACTOR TO FIELD LOCATE	EA	2
19	32-LB HIGH-POTENTIAL MAGNESIUM ANODE	EA	2

CONNECTION DETAIL 2 URW-3C-202
NO SCALE

SRJV
MAY 10 2013
ISSUED FOR CONSTRUCTION

REV	DATE	BY	APP	REG NO	EXPIRES	SEAL HOLDER	DESCRIPTION
0	10/19/12	KY	RG	C74831	12/31/13	RAFAEL GONZALEZ	APPROVED FOR CONSTRUCTION

REVISION DATES (DESIGN STAGE ONLY)

DESIGNED BY K. YAMAKAWA
DRAWN BY K. YAMAKAWA
CHECKED BY R. GONZALEZ
IN CHARGE R. GONZALEZ
DATE 10/19/12

REGISTERED PROFESSIONAL ENGINEER — RAFAEL GONZALEZ — NO. C74831 — EXP. 12-31-13 — CIVIL — STATE OF CALIFORNIA

Exposition Metro Line Construction Authority
Expo
EXPO SKANSKA RADOS
444 South Flower Street
Suite 2200
Los Angeles, CA 90071
TEL (213) 443-7463
FAX (213) 362-9481

PARSONS BRINCKERHOFF

CURRENT STATUS

EXPOSITION LRT PROJECT- PHASE 2
RECLAIMED WATER RELOCATION
CONNECTION DETAILS

Exposition Construction Authority
Approved for Construction
Drawings - AFC
APR 15 2013

CONTRACT NO XP8902-002
DRAWING NO URW-3C-401 REV 0
SCALE NO SCALE
SHEET NO 73 OF 108

gonzalezr 11:00:02 AM 10/18/2012
Plot Driver=EXPO2-Full-BW-pdf.plt Pentable=EXPO2-PENTABLE.tbl C:\EXPO2\Batch Plot\3C\expo2-URW-3C-401.plg

SCALES HORIZ SCALE: NO SCALE VERT SCALE:
SHEET
INDEX NUMBER

CITY DRAWING NO. U9212
SHEET NO. 73 OF 108
DATE 11-13 2012
LEON E. SWANN, P.E., CITY ENGINEER
ENGINEERING

REFERENCE :
SUBMITTED BY:
APPROVED BY:
REVIEWED : DATE : 20__
REVIEWED : DATE : 20__
REVIEWED : DATE : 20__
REVIEWED : DATE : 11-13 2012
CITY

NO.	DATE	BY	DESCRIPTION
			REVISIONS

APPROVED

City of Santa Monica
Department of Public Works
1437 4th Street, Suite 300 Santa Monica, CA 90401
TEL. (310)458-8721 FAX. (310)393-4425
e-mail : smengineering@smgov.net

Plotted by: gonzalezr 10/18/2012 C:\EXPO2\Batch Plot\3C\expo2-URW-3C-401.plg

Sheet Version 2.01

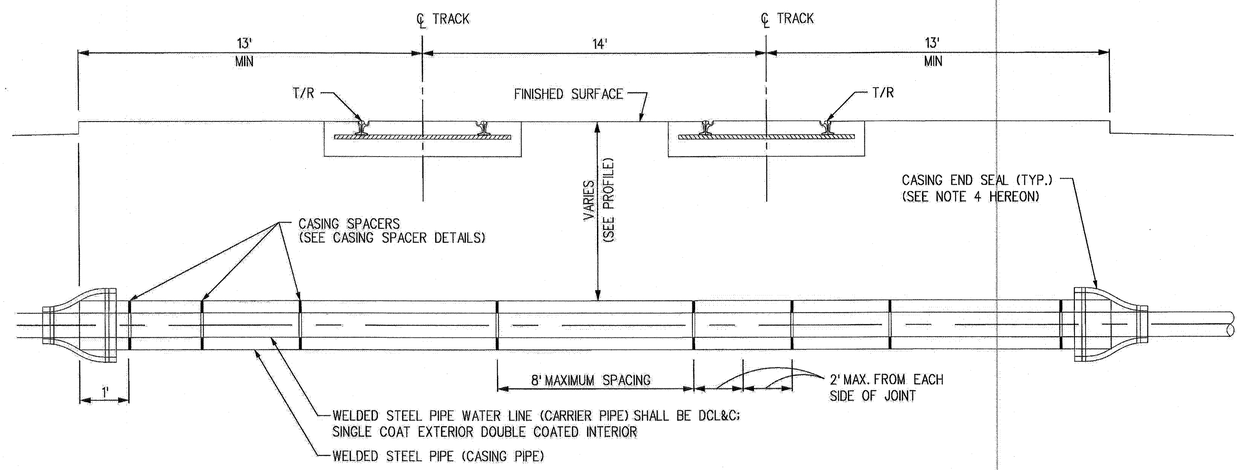

TRACK CROSSING AND PIPE CASING DETAIL

NO SCALE

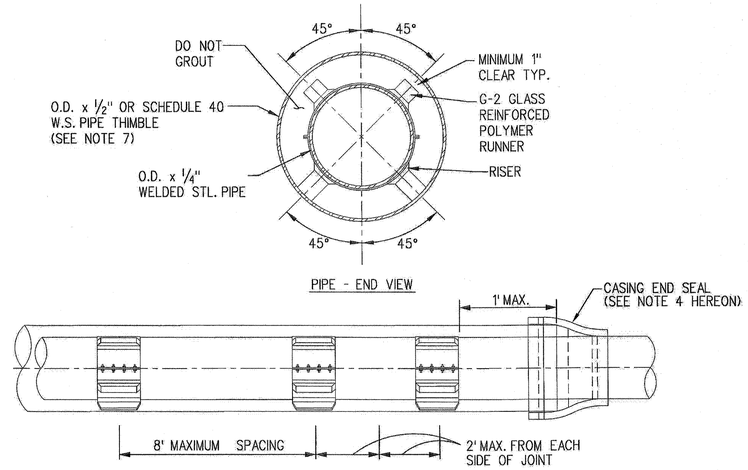

NOTES:

1. PLASTIC SPACERS SHALL BE SPACED AT 8'-0" MAX. INTERVALS.
2. THICKNESSES ARE MINIMUM. CONTRACTOR MAY ELECT TO USE THICKER WALL PIPE OR LARGER DIAMETER CASING PIPE AT NO ADDITIONAL COST.
3. CASING PIPE SHALL BE NEW. ALL CASING SECTIONS SHALL BE JOINED BY CONTINUOUS WELD. ALL FIELD WELDS SHALL BE BUTT WELDED FULL CIRCUMFERENCE WITH FULL PENETRATION.
4. EACH END OF THE CASING SHALL BE SEALED WITH A WATERTIGHT FLEXIBLE SEALER - 1/8" THICK, EPDM CASING END SEAL (MODEL C) WITH STAINLESS STEEL WORM-SCREW BAND CLAMPS.
5. ALL CARRIER PIPE JOINTS WITHIN THE CASING SHALL BE WELDED AND DIELECTRICALLY COATED.
6. ELECTRICAL OR METALLIC INSULATION BETWEEN THE CASING AND CARRIER PIPE SHALL BE MAINTAINED (NO METAL CONTACT).
7. ALL CASINGS MEETING MINIMUM DEPTH OF COVER (48 INCH) SHALL HAVE A THICKNESS OF 1/2", OTHERWISE SCHEDULE 40 STEEL CASING WILL BE USED AS SPECIFIED IN PLANS.

CASING SPACER DETAILS (PSI MODEL C12G-2)

NO SCALE

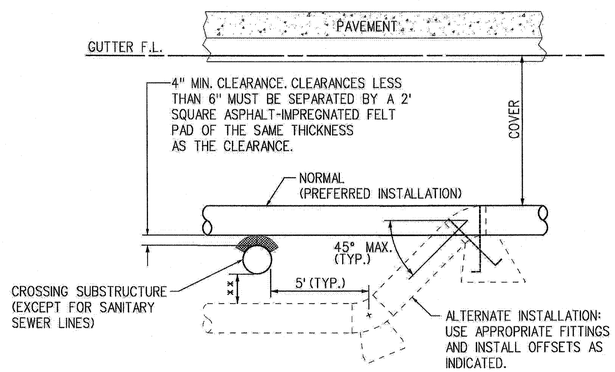

xx - 6" MIN. CLEARANCE FOR 12" DIA. AND SMALLER PIPE
12" MIN. CLEARANCE FOR LARGER THAN 12" DIA. PIPE

NOTE: THE MINIMUM CLEARANCES FOR UNDERCROSSING SHOWN HEREON SUPERCEDE THE MINIMUM OF 4"

TYPICAL SUBSTRUCTURE CROSSING DETAIL

NO SCALE

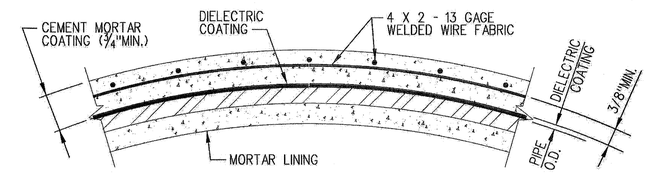

CEMENT MORTAR COATING W/DI-ELECTRIC COATING

NO SCALE

SRJV
MAY 10 2013
ISSUED FOR CONSTRUCTION

REV	DATE	BY	APP	REG NO	EXPIRES	SEAL HOLDER	DESCRIPTION
0	10/19/12	KY	RG	C74831	12/31/13	RAFAEL GONZALEZ	APPROVED FOR CONSTRUCTION

REVISION DATES (DESIGN STAGE ONLY)

DESIGNED BY K. YAMAKAWA
DRAWN BY K. YAMAKAWA
CHECKED BY R. GONZALEZ
IN CHARGE R. GONZALEZ
DATE 10/19/12

REGISTERED PROFESSIONAL ENGINEER — RAFAEL GONZALEZ — NO. C74831 — EXP. 12-31-13 — CIVIL — STATE OF CALIFORNIA

Exposition Metro Line Construction Authority
Expo
EXPO SKANSKA RADOS
444 South Flower Street
Suite 2200
Los Angeles, CA 90071
TEL (213) 443-7463
FAX (213) 362-9481

PARSONS BRINCKERHOFF

CURRENT STATUS

Exposition Construction Authority Approved for Construction Drawings - AFC
APR 15 2013

EXPOSITION LRT PROJECT- PHASE 2 RECLAIMED WATER RELOCATION MISCELLANEOUS DETAILS

CONTRACT NO XP8902-002
DRAWING NO URW-3C-501 REV 0
SCALE NO SCALE
SHEET NO 74 OF 108

gonzalezr 11:00:06 AM 10/18/2012
Plot Driver=EXPO2-Full-BW-pdf.plt Pentable=EXPO2-PENTABLE.tbl C:\EXPO2\Batch Plot\3C\expo2-URW-3C-501.plg

SCALES HORIZ SCALE: VERT SCALE:
SHEET
INDEX NUMBER

Sheet Version 2.01

REFERENCE:
SUBMITTED BY:
CITY DRAWING NO. U9212
SHEET NO. 74 OF 108
DATE 11-13 2012
APPROVED BY: LEON E. SWAIN, P.E., CITY ENGINEER
ENGINEERING

REVIEWED: DATE: 20__
REVIEWED: DATE: 20__
REVIEWED: DATE 11-13 2012
CITY

NO.	DATE	BY	DESCRIPTION
			REVISIONS

APPROVED

City of Santa Monica
Department of Public Works
1437 4th Street, Suite 300 Santa Monica, CA 90401
TEL. (310)458-8721 FAX. (310)393-4425
e-mail : smengineering@smgov.net

Plotted by: gonzalezr 10/18/2012 C:\EXPO2\Batch Plot\3C\expo2-URW-3C-501.plg

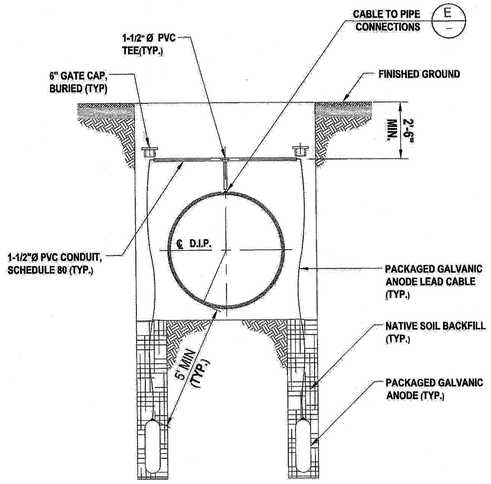

TYPICAL DUAL ANODE INSTALLATION FOR CATHODIC PROTECTION (A)
D.I.P. MAIN — NO SCALE

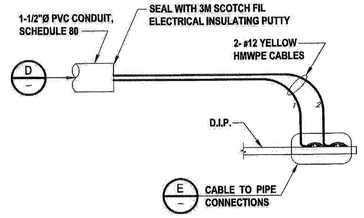

TYPE 1 GCPTS WIRE DIAGRAM (C)
D.I.P. MAIN — NO SCALE

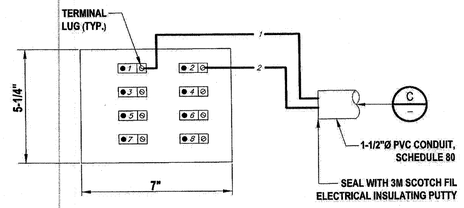

TYPE 1 GCPTS TERMINAL BOARD (D)
D.I.P. MAIN — NO SCALE

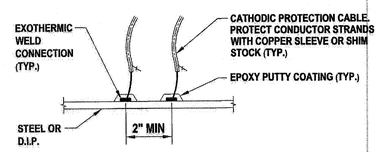

EXOTHERMIC WELD CONNECTION - DETAIL (E)
NO SCALE

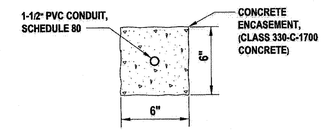

CONDUIT ENCASEMENT - SECTION (F)
NO SCALE

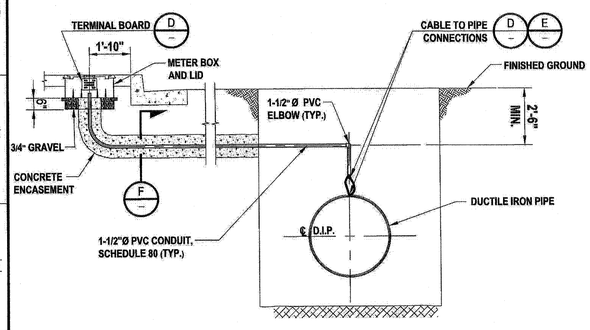

GALVANIC CATHODIC PROTECTION TEST STATION (GCPTS) (B)
D.I.P. MAIN — NO SCALE

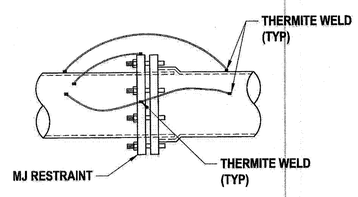

MECHANICAL JOINT

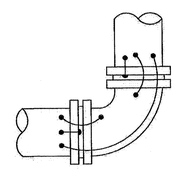

D.I.P. BEND (90° SHOWN AS TYPICAL)

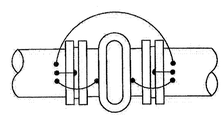

VALVE

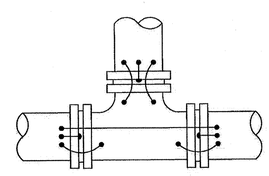

TEE

DETAIL NOTES:

1. ALL WIRES WELDS SHALL BE 6" APART MIN.
2. EACH WELD TO BE FIELD COATED
3. BOND WIRE SHALL BE NO. 4 AWG.

JOINT BONDING DETAIL (G)
D.I.P. MAIN — NO SCALE

CORROSION MITIGATION NOTES

1. INSTALLATION OF CATHODIC PROTECTION MATERIALS AND TESTING OF THE CATHODIC PROTECTION SYSTEM SHALL BE DONE BY AN INDIVIDUAL CERTIFIED BY NACE INTERNATIONAL AS A CATHODIC PROTECTION SPECIALIST OR BY PERSONS UNDER THE SUPERVISION OF A CERTIFIED CATHODIC PROTECTION SPECIALIST. PROOF OF CERTIFICATION SHALL BE SUBMITTED TO THE ENGINEER.
2. SUBMIT TO THE ENGINEER CATALOG CUTS AND TECHNICAL DATA SHEETS OF THE PRODUCTS TO BE INSTALLED AS PART OF THE CATHODIC PROTECTION SYSTEM.
3. TEST CABLES SHALL BE SINGLE CONDUCTOR, #12 GAGE, STRANDED COPPER, WITH HMWPE INSULATION,RATED AT 600 VOLTS. TEST CABLE COLORS SHALL BE AS INDICATED ON THE DRAWINGS.
4. CONDUIT USED FOR THE CABLE INSTALLATIONS SHALL BE RIGID SCHEDULE 80 PVC. ALL FITTINGS USEDFOR THE CONNECTION OF CONDUIT SECTIONS SHALL BE SCHEDULE 80 PVC.
5. CP TEST STATION TERMINAL BOARDS SHALL BE 1/4 INCH THICK MICARTA INSULATING PANELS WITH SHUNTS,TERMINAL LUGS, AND BRASS FASTENERS. DIMENSIONS AND CONFIGURATION OF THE TERMINAL BOARDSSHALL BE AS INDICATED ON THE DRAWINGS.
6. THE MAGNESIUM ANODES OF THE GALVANIC ANODE PACKAGES SHALL CONFORM TO ASTM B 843 CHEMICALREQUIREMENTS FOR GRADE M1C HIGH POTENTIAL MAGNESIUM ANODES. THE MAGNESIUM ANODES SHALLMEET THE MINIMUM OPEN CIRCUIT POTENTIAL AND CURRENT EFFICIENCY REQUIREMENTS OF THE ASTM G 97 STANDARD TEST METHOD. THE ANODE PACKAGES SHALL WEIGH NOT LESS THAN 100 POUNDS AND CONTAIN A MAGNESIUM ANODE WEIGHING NOT LESS THAN 48 POUNDS PACKAGED IN A CLOTH BAGWITH A BACKFILL MIXTURE OF 75 PERCENT GYPSUM, 20 PERCENT BENTONITE CLAY, AND 5 PERCENTSODIUM SULFATE. THE GALVANIC ANODE PACKAGE SHALL HAVE A MAXIMUM LENGTH OF 30 INCHES. THEANODE SHALL HAVE A FACTORY INSTALLED LEAD CABLE WHICH IS A SINGLE CONDUCTOR, #12 GAGE,STRANDED COPPER, WITH HMWPE INSULATION, RATED AT 600 VOLTS. THE LEAD CABLE SHALL BE OFSUFFICIENT LENGTH TO EXTEND CONTINUOUS AND UNSPLICED FROM THE INSTALLED LOCATION OF THEANODE PACKAGE TO THE PIPELINE CONNECTION OR TO THE TEST STATION METER BOX CONNECTION,DEPENDING ON THE ANODE PACKAGE'S USAGE. THE ANODE PACKAGES SHALL BE DELIVERED TO AND STORED AT THE JOB SITE IN WATERPROOF BAGS.
7. CABLE CONNECTIONS TO THE PIPELINES SHALL BE MADE BY THE EXOTHERMIC WELD METHOD ON THE TOP OF THE INSTALLED PIPELINE. CABLE WELD CONNECTIONS SHALL BE COATED WITH A TWO-PART EPOXY PUTTY APPROVED BY THE ENGINEER. ANY RESIDUE OR DEBRIS SHALL BE REMOVED FROM AREAS TO BE COATED BEFORE THE PUTTY IS APPLIED.
8. PACKAGED ANODE INSTALLATION: A PACKAGED ANODE SHALL BE INSTALLED IN AN EXCAVATED HOLE ON EITHER SIDE OF THE PIPE. IT SHALL BE INSTALLED IN A POSITION SUCH THAT ANY PART OF THE MAGNESIUM ANODE IS A MINIMUM DISTANCE OF 5 FEET FROM THE PIPE SURFACE. THE PACKAGED ANODE SHALL BEBACKFILLED SUCH THAT A MINIMUM OF 6 INCHES OF NATIVE SOIL, COMPACTED FIRM, SURROUNDS IT IN THEEXCAVATION HOLE. AFTER BACKFILLING, WET THE INSTALLATION AREA WITH WATER TO SATURATION. THE ANODE CABLE SHALL BE ROUTED IN PVC CONDUIT TO EITHER A PIPELINE CONNECTION LOCATION OR A TEST STATION METER BOX, DEPENDING ON THE PACKAGED ANODE'S USAGE.
9. CATHODIC PROTECTION TEST STATION INSTALLATION: A CATHODIC PROTECTION TEST STATION SHALL BE NEAREST WELDED JOINT OF THE PIPELINE TO THE SURVEY STATION LOCATION INDICATED A CATHODIC PROTECTION TEST STATION SHALL BE INSTALLED IN ACCORDANCE WITH NOTES 7 AND 8 ABOVE AND THE RELATED DETAIL DRAWINGS.
10. THE CONTRACTOR SHALL PROCURE A ONE-GALLON SOIL SAMPLE AT THE SURVEY STATION LOCATIONS OF THE BEGINNING AND ENDING OF PIPELINE CONNECTION POINTS AND EACH ANODE STATION OR CATHODIC PROTECTION TEST STATION INSTALLATION LOCATION. THE SAMPLES SHALL BE TAKEN AT THE APPROXIMATE SPRING LINE ELEVATION OF THE INSTALLED PIPELINE. THE SAMPLES SHALL BE PROVIDED TO THE ENGINEER.
11. THE CORROSION PROTECTION SPECIALIST SHALL TEST ALL WELDED CABLE CONNECTIONS FOR ADHESION PRIOR TO BACKFILLING OF THE INSTALLED PIPELINE.
12. THE CORROSION PROTECTION SPECIALIST SHALL TEST INSULATED JOINTS FOR CONDUCTIVITY BEFORE THEY ARE INSTALLED, AFTER THE PIPELINE IS BACKFILLED, AND AFTER ALL CONNECTIONS TO EXISTING PIPELINES HAVE BEEN MADE.
13. THE CORROSION PROTECTION SPECIALIST SHALL PERFORM POTENTIAL TESTS AT EACH CATHODIC PROTECTION TEST STATION AFTER ALL CONNECTIONS TO THE PIPELINE ARE MADE AND IT IS COMPLETELY BACKFILLED. POTENTIAL TESTS SHALL BE TAKEN OF EACH TEST CABLE PRIOR TO CONNECTION TO THE TERMINAL BOARD AND OF EACH TERMINAL BOARD TEST POINT AFTER CABLE CONNECTIONS HAVE BEEN MADE.
14. THE CONTRACTOR SHALL PROVIDE THE ENGINEER WITH A REPORT, PREPARED BY THE CATHODIC PROTECTION SPECIALIST, OF ALL TESTS CONDUCTED FOR THE CONTRACT WORK WHICH INCLUDES TEST DATA, TEST RESULTS, DISCUSSION, AND RECOMMENDATIONS.

SRJV
MAY 10 2013
ISSUED FOR CONSTRUCTION

REV	DATE	BY	APP	REG NO	EXPIRES	SEAL HOLDER	DESCRIPTION
0	10/19/12	KY	RG	C74831	12/31/13	RAFAEL GONZALEZ	APPROVED FOR CONSTRUCTION

REVISION DATES (DESIGN STAGE ONLY)

DESIGNED BY K. YAMAKAWA
DRAWN BY K. YAMAKAWA
CHECKED BY R. GONZALEZ
IN CHARGE R. GONZALEZ
DATE 10/19/12

REGISTERED PROFESSIONAL ENGINEER — RAFAEL GONZALEZ — No. C74831 — Exp. 12-31-13 — CIVIL — STATE OF CALIFORNIA

Exposition Metro Line Construction Authority
Expo
EXPO SKANSKA RADOS
444 South Flower Street
Suite 2200
Los Angeles, CA 90071
TEL (213) 443-7463
FAX (213) 362-9481

PARSONS BRINCKERHOFF

CURRENT STATUS

EXPOSITION LRT PROJECT- PHASE 2
RECLAIMED WATER RELOCATION
CATHODIC PROTECTION DETAILS
1 OF 2

Exposition Construction Authority
Approved for Construction
Drawings - AFC
APR 15 2013

CONTRACT NO XP8902-002
DRAWING NO URW-3C-502 REV 0
SCALE NO SCALE
SHEET NO 75 OF 108

gonzalezr 11:00:07 AM 10/18/2012
Plot Driver=EXPO2-Full-BW-pdf.plt
Pentable=EXPO2-PENTABLE.tbl
C:\EXPO2\Batch Plot\3C\expo2-URW-3C-502.plg

SCALES — HORIZ SCALE: — VERT SCALE:
SHEET
INDEX NUMBER

Sheet Version 2.01

NO.	DATE	BY	DESCRIPTION
			REVISIONS

REFERENCE :
SUBMITTED BY: Dwy de Venice
APPROVED BY: Leon E. Swain — LEON E. SWAIN, P.E., CITY ENGINEER — ENGINEERING
CITY DRAWING NO. U9212
SHEET NO. 75 OF 108
DATE : 11-13 2012
REVIEWED : DATE : 20
REVIEWED : DATE : 20
REC'MED : DATE : 11-13 2012
APPROVED
CITY

City of Santa Monica
Department of Public Works
1437 4th Street, Suite 300 Santa Monica, CA 90401
TEL. (310)458-8721 FAX. (310)393-4425
e-mail : smengineering@smgov.net

Plotted by: gonzalezr 10/18/2012 C:\EXPO2\Batch Plot\3C\expo2-URW-3C-502.plg

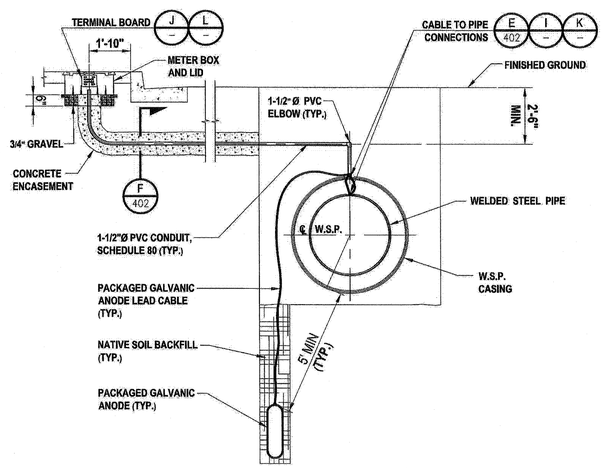

SINGLE ANODE GALVANIC CATHODIC PROTECTION TEST STATION (GCPTS)
W.S.P. MAIN — NO SCALE — H –

DETAIL NOTES:

1. INSTALL THE GALVANIC ANODE CATHODIC PROTECTION SYSTEM COMPONENTS SHOWN HERON AND IN ACCORDANCE WITH THE LOCATIONS INDICATED ON THE PLAN SHEETS, AND ONLY WHEN THE DIELECTRIC UNDERCOAT SYSTEM FOR THE WELDED STEEL PIPE IS COAL TAR ENAMEL OR EXTRUDED POLYOLEFIN.
2. PACKAGED GALVANIC ANODES MAY BE INSTALLED VERTICALLY OR HORIZONTALLY.
3. CONTRACTOR TO INSTALL TWO (TYPES 1 AND 2) TERMINAL BOARDS WITHIN ONE METER BOX THAT ARE TO BE LOCATED AT EACH END OF THE PIPE WITH CASING RELOCATIONS.

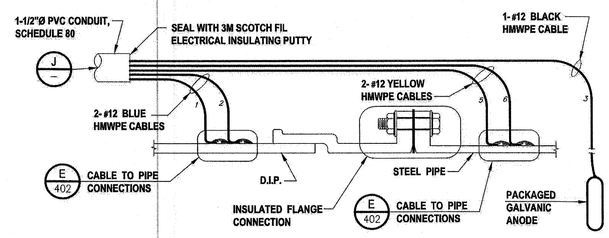

TYPE 2 GCPTS WIRE DIAGRAM AT INSULATING JOINT
D.I.P. TO W.S.P. TRANSITION — NO SCALE — I –

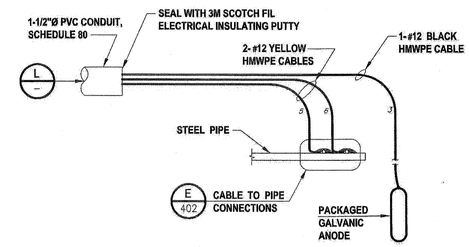

TYPE 3 GCPTS WIRE DIAGRAM
W.S.P. CASING — NO SCALE — K –

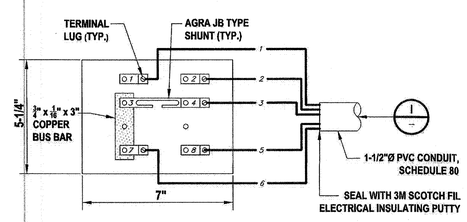

TYPE 2 GCPTS TERMINAL BOARD
D.I.P. TO W.S.P. TRANSITION — NO SCALE — J –

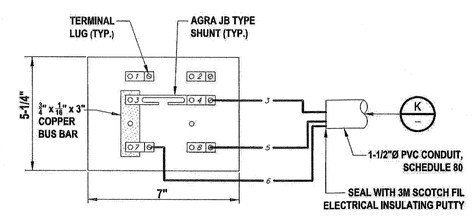

TYPE 3 GCPTS TERMINAL BOARD
W.S.P. CASING — NO SCALE — L –

SRJV
MAY 10 2013
ISSUED FOR CONSTRUCTION

REV	DATE	BY	APP	REG NO	EXPIRES	SEAL HOLDER	DESCRIPTION
0	10/19/12	KY	RG	C74831	12/31/13	RAFAEL GONZALEZ	APPROVED FOR CONSTRUCTION

DESIGNED BY K. YAMAKAWA
DRAWN BY K. YAMAKAWA
CHECKED BY R. GONZALEZ
IN CHARGE R. GONZALEZ
DATE 10/19/12

REGISTERED PROFESSIONAL ENGINEER — RAFAEL GONZALEZ — NO. C74831 — EXP. 12-31-13 — CIVIL — STATE OF CALIFORNIA

Exposition Metro Line Construction Authority
Expo
EXPO SKANSKA RADOS
444 South Flower Street
Suite 2200
Los Angeles, CA 90071
TEL (213) 443-7463
FAX (213) 362-9481
PARSONS BRINCKERHOFF
CURRENT STATUS

EXPOSITION LRT PROJECT- PHASE 2
RECLAIMED WATER RELOCATION
CATHODIC PROTECTION DETAILS
2 OF 2

Exposition Construction Authority
Approved for Construction
Drawings - AFC
APR 15 2013

CONTRACT NO XP8902-002
DRAWING NO URW-3C-503 REV 0
SCALE NO SCALE
SHEET NO 76 OF 108

gonzalezr 11:00:08 AM 10/18/2012
Plot Driver=EXPO2-Full-BW-pdf.plt Pentable=EXPO2-PENTABLE.tbl C:\EXPO2\Batch Plot\3C\expo2-URW-3C-503.plg

SCALES HORIZ SCALE: VERT SCALE:
SHEET
INDEX NUMBER

REVISION DATES (DESIGN STAGE ONLY)

Sheet Version 2.01

REFERENCE :
SUBMITTED BY:
CITY DRAWING NO. U9212
SHEET NO.: 76 OF 108
DATE : 11-13 2012
APPROVED BY: LEON E. SWAIN, P.E., CITY ENGINEER
ENGINEERING

REVIEWED : DATE : 20
REVIEWED : DATE : 20
REVIEWED : DATE : 11-13 2012
CITY

NO.	DATE	BY	DESCRIPTION
			REVISIONS

APPROVED

City of Santa Monica
Department of Public Works
1437 4th Street, Suite 300 Santa Monica, CA 90401
TEL. (310)458-8721 FAX. (310)393-4425
e-mail : smengineering@smgov.net

Plotted by: gonzalezr 10/18/2012 C:\EXPO2\Batch Plot\3C\expo2-URW-3C-503.plg

EXPOSITION METRO LINE CONSTRUCTION AUTHORITY

Expo

EXPOSITION LIGHT RAIL TRANSIT PROJECT- PHASE 2

SEWER REARRANGEMENTS FOR SEGMENT 3C

SHT NO.	DRAWING NO.	SHEET TITLE
1.	US-3C-101	SEWER REARRANGEMENTS VICINITY MAP & KEY MAP
2.	US-3C-302	SEWER REARRANGEMENTS PLAN STA 9+50 TO STA 12+50
3.	US-3C-303	SEWER REARRANGEMENTS PLAN & PROFILE STA 12+50 TO STA 15+50
4.	US-3C-304	SEWER REARRANGEMENTS PLAN & PROFILE STA 15+50 TO STA 19+50
5.	US-3C-305	SEWER REARRANGEMENTS PLAN & PROFILE STA 19+50 TO STA 23+50
6.	US-3C-401	SEWER REARRANGEMENTS SEWER DETAILS

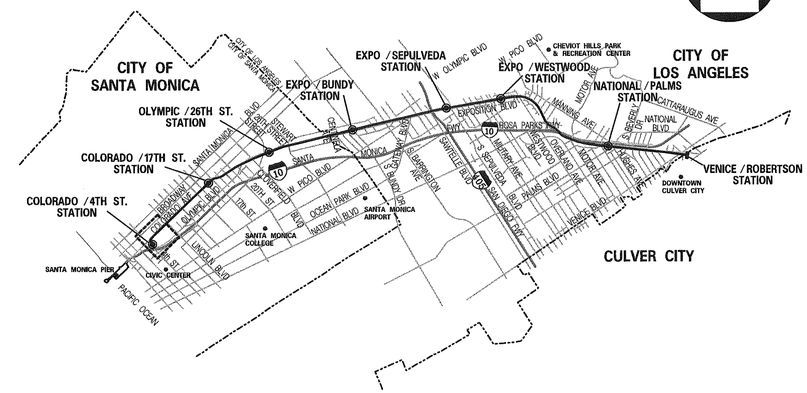

VICINITY MAP

NO SCALE

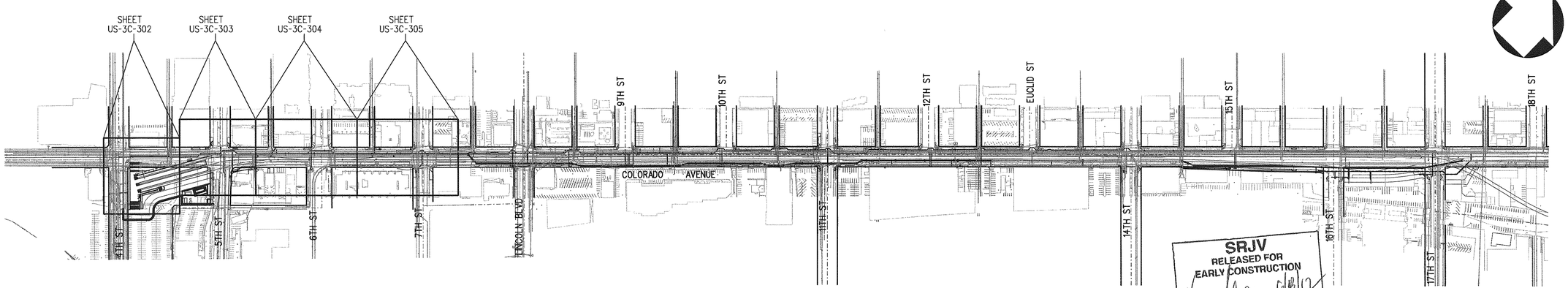

SRJV RELEASED FOR EARLY CONSTRUCTION
APPROVED BY DATE 6/8/12

KEY MAP

NO SCALE

REV	DATE	BY	APP	REG NO	EXPIRES	SEAL HOLDER	DESCRIPTION
0	5/21/12	RG	JFH	C50189	06/30/13	JAMES F. HAYES	APPROVED FOR CONSTRUCTION

DESIGNED BY R. GONZALEZ
DRAWN BY R. GONZALEZ
CHECKED BY K. YAMAKAWA
IN CHARGE J. HAYES
DATE 5/21/12

REGISTERED PROFESSIONAL ENGINEER JAMES F. HAYES No. C50189 Exp. 06-30-13 CIVIL STATE OF CALIFORNIA

Exposition Metro Line Construction Authority
Expo

EXPO SKANSKA RADOS
444 South Flower Street
Suite 2200
Los Angeles, CA 90071
TEL (213) 443-7463
FAX (213) 362-9481

PARSONS BRINCKERHOFF
CURRENT STATUS

EXPOSITION LRT PROJECT- PHASE 2
SEWER REARRANGEMENTS
VICINITY MAP & KEY MAP

CONTRACT NO XP8902-002
DRAWING NO US-3C-101 REV 0
SCALE NO SCALE
SHEET NO

GonzalezR 2:38:35 PM 5/18/2012
Plot Driver=EXPO2-Full-BW-pdf.plt Pentable=EXPO2-PENTABLE.tbl
C:\EXPO2\Batch Plot\3C\expo2-US-3C-101.plg

SCALES HORIZ SCALE: VERT SCALE: SHEET INDEX NUMBER

REVISION DATES (DESIGN STAGE ONLY)

Sheet Version 2.01

REFERENCE:
SUBMITTED BY:
APPROVED BY: LEON E. SWAIN, P.E., CITY ENGINEER
CITY DRAWING NO. U 9203
SHEET NO. SHT 5 OF 11 TOT
DATE: 5-30 2012

REVIEWED: DATE: 5/29 2012
REVIEWED: DATE: 5/29 2012
REVIEWED: DATE: 20

REVISIONS: NO. DATE BY DESCRIPTION APPROVED

City of Santa Monica
Department of Public Works
1437 4th Street, Suite 300 Santa Monica, CA 90401
TEL. (310)458-8721 FAX. (310)393-4425
e-mail : smengineering@smgov.net

5/18/2012 C:\EXPO2\Batch Plot\3C\expo2-US-3C-101.plg
Plotted by: GonzalezR

ECI #00022 - PENDING

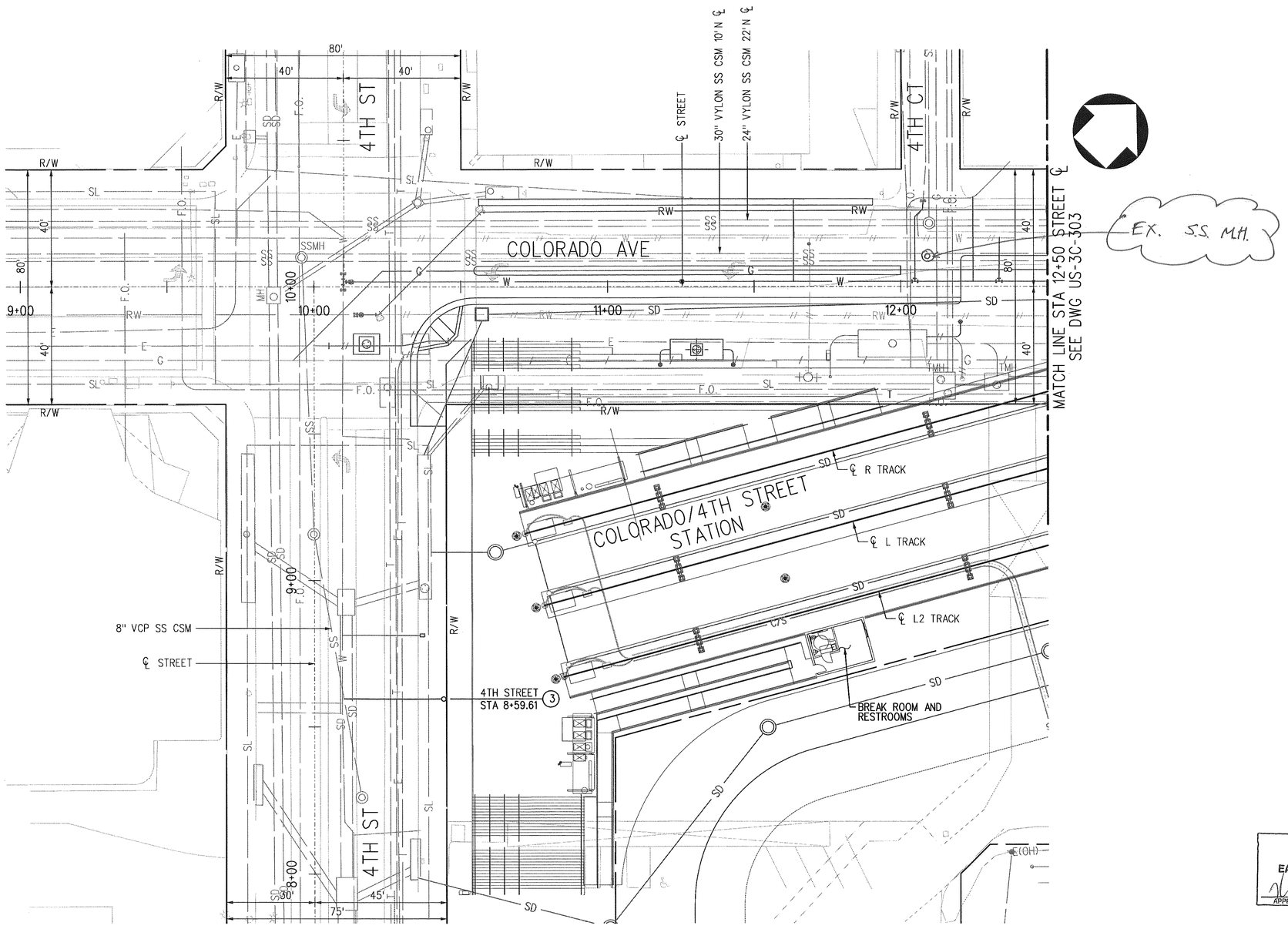

NOTES:

1. SEE STREET PLANS FOR PROP STREET IMPROVEMENTS.
2. SEE WATER PLANS FOR FOR PROP DOMESTIC WATER IMPROVEMENTS
3. SEE RECLAIMED WATER PLANS FOR FOR PROP RECLAIMED WATER IMPROVEMENTS
4. SEE COMPOSITE UTILITY REARRANGEMENT PLANS (UR SHEETS) FOR PROPOSED & EXISTING UTILITY LOCATIONS.
5. SEE DRAINAGE PLANS FOR PROPOSED DRAINAGE.
6. SEE STREET LIGHTING PLANS FOR EXACT LOCATIONS AND DETAILS.
7. RECONNECT EXISTING LATERAL/HOUSE CONNECTIONS (WHERE NECESSARY).
8. FOR SPECIFIC SEWER MANHOLE GEOMETRIC DETAILS, REFER TO PLAN NUMBER US-3B-402.
9. FOR SEWER PIPE BEDDING DETAILS REFER TO CITY OF SANTA MONICA APPROVED MATERIAL SUBMITTAL.
10. PORTIONS OF THE ABANDONED UTILITIES WITHIN 12" VERTICAL SEPARATION FROM NEW UTILITIES SHALL BE REMOVED AS NECESSARY PER DIRECTION OF AUTHORITY HAVING JURISDICTION.

NOTE: CONTRACTOR TO VERIFY EXISTING INVERT PRIOR TO CONSTRUCTION. IF DISCREPENCY ARISES, CONTRACTOR SHALL CONTACT ENGINEER OF RECORD.

NOTE: EXISTING SEWER LATERALS ARE APPROXIMATE PER CITY OF SANTA MONICA SEWER ATLAS. LOCATIONS TO BE CONFIRMED IN FIELD.

CONSTRUCTION NOTES:

1. CONSTRUCT SEWER MANHOLE PER SPPWC STD PLAN NO. 200-3 (MODIFIED FOR I.D.=6') WITH FRAME AND COVER PER SPPWC STD PLAN 632-3 FOR A 30" COVER. INTERIOR OF PRECAST MANHOLE SHALL BE LINED WITH AMERON (WHITE) PVC T-LOCK LINER OR APPROVED SIMILAR.
2. ABANDON EXISTING SANITARY SEWER MANHOLE. WITH PLUG
3. CONNECT SEWER PVC LATERAL SERVICE PER SPPWC STD PLAN 223-2 (CASE TYPE AS APPROPRIATE)
4. CONSTRUCT 8" PVC SEWER PIPE
5. ABANDON EXISTING SANITARY SEWER HOUSE CONNECTION @ EXIST. "Y" and PL.
6. NOT USED ON THIS SHEET

SRJV
RELEASED FOR EARLY CONSTRUCTION
APPROVED BY DATE

20' 10' 0 20' 40'
HORIZONTAL GRAPHIC SCALE

CITY DRAWING NO. U9203
SHEET NO. 6 OF 11 TOT.
DATE 5-30 2012
APPROVED BY: LEON E. SWAIN, P.E., CITY ENGINEER
ENGINEERING

REFERENCE:
SUBMITTED BY:
REVIEWED: DATE 5/29 2012
REVIEWED: DATE 5/29 2012
REVIEWED: DATE 20
CITY

NO.	DATE	BY	DESCRIPTION

REVISIONS
APPROVED

City of Santa Monica
Department of Public Works
1437 4th Street, Suite 300 Santa Monica, CA 90401
TEL. (310)458-8721 FAX. (310)393-4425
e-mail : smengineering@smgov.net

Plotted by: GonzalezR 5/18/2012 C:\EXPO2\Batch Plot\3C\expo2-US-3C-302.plg

REV	DATE	BY	APP	REG NO	EXPIRES	SEAL HOLDER	DESCRIPTION
0	5/21/12	RG	JFH	C50189	06/30/13	JAMES F. HAYES	APPROVED FOR CONSTRUCTION

REVISION DATES (DESIGN STAGE ONLY)

DESIGNED BY R. GONZALEZ
DRAWN BY R. GONZALEZ
CHECKED BY K. YAMAKAWA
IN CHARGE J. HAYES
DATE 5/21/12

REGISTERED PROFESSIONAL ENGINEER JAMES F. HAYES No. C50189 Exp. 06-30-13 CIVIL STATE OF CALIFORNIA

Exposition Metro Line Construction Authority
Expo
EXPO SKANSKA RADOS
444 South Flower Street
Suite 2200
Los Angeles, CA 90071
TEL (213) 443-7463
FAX (213) 362-9481
PARSONS BRINCKERHOFF
CURRENT STATUS

EXPOSITION LRT PROJECT- PHASE 2
SEWER REARRANGEMENTS
PLAN
STA 9+50 TO STA 12+50

CONTRACT NO XP8902-002
DRAWING NO US-3C-302 REV 0
SCALE 1" = 20'
SHEET NO

GonzalezR 2:38:39 PM 5/18/2012
Plot Driver=EXPO2-Full-BW-pdf.plt Pentable=EXPO2-PENTABLE.tbl C:\EXPO2\Batch Plot\3C\expo2-US-3C-302.plg

SCALES HORIZ SCALE: VERT SCALE:
SHEET
INDEX NUMBER

Sheet Version 2.01

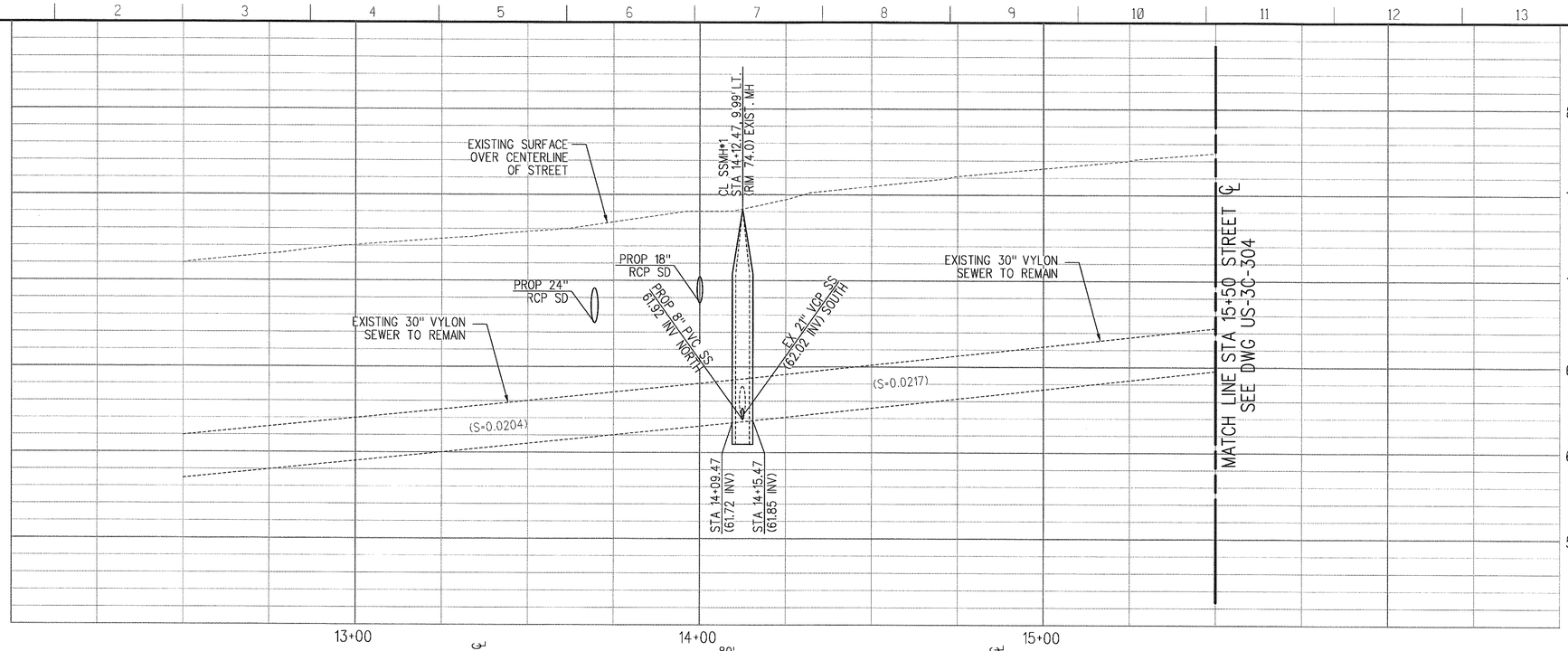

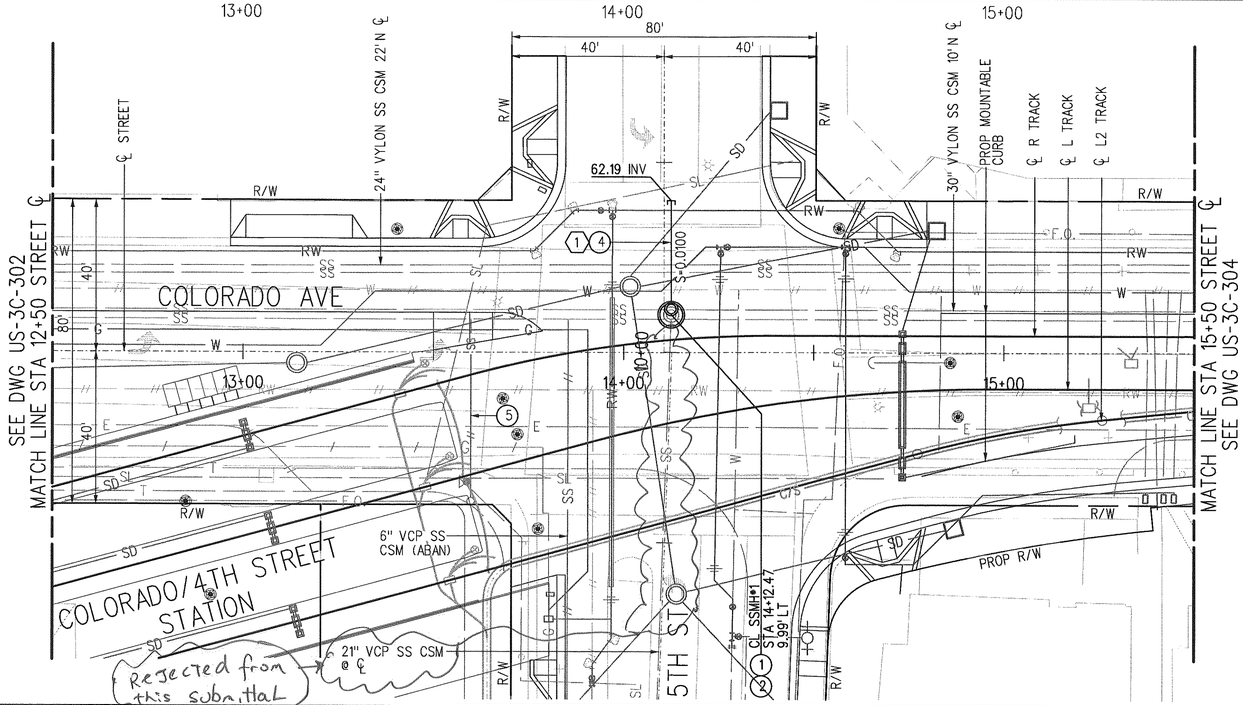

NOTES:

1. SEE STREET PLANS FOR PROP STREET IMPROVEMENTS.
2. SEE WATER PLANS FOR FOR PROP DOMESTIC WATER IMPROVEMENTS
3. SEE RECLAIMED WATER PLANS FOR FOR PROP RECLAIMED WATER IMPROVEMENTS
4. SEE COMPOSITE UTILITY REARRANGEMENT PLANS (UR SHEETS) FOR PROPOSED & EXISTING UTILITY LOCATIONS.
5. SEE DRAINAGE PLANS FOR PROPOSED DRAINAGE.
6. SEE STREET LIGHTING PLANS FOR EXACT LOCATIONS AND DETAILS.
7. RECONNECT EXISTING LATERAL/HOUSE CONNECTIONS (WHERE NECESSARY).
8. FOR SPECIFIC SEWER MANHOLE GEOMETRIC DETAILS, REFER TO PLAN NUMBER US-3B-402.
9. FOR SEWER PIPE BEDDING DETAILS REFER TO CITY OF SANTA MONICA APPROVED MATERIAL SUBMITTAL.
10. PORTIONS OF THE ABANDONED UTILITIES WITHIN 12" VERTICAL SEPARATION FROM NEW UTILITIES SHALL BE REMOVED AS NECESSARY PER DIRECTION OF AUTHORITY HAVING JURISDICTION.

NOTE: CONTRACTOR TO VERIFY EXISTING INVERT PRIOR TO CONSTRUCTION. IF DISCREPENCY ARISES, CONTRACTOR SHALL CONTACT ENGINEER OF RECORD.

NOTE: EXISTING SEWER LATERALS ARE APPROXIMATE PER CITY OF SANTA MONICA SEWER ATLAS. LOCATIONS TO BE CONFIRMED IN FIELD.

CONSTRUCTION NOTES:

1. CONSTRUCT SEWER MANHOLE PER SPPWC STD PLAN NO. 200-3 (MODIFIED FOR I.D.=6') WITH FRAME AND COVER PER SPPWC STD PLAN 632-3 FOR A 30" COVER. INTERIOR OF PRECAST MANHOLE SHALL BE LINED WITH AMERON (WHITE) PVC T-LOCK LINER OR APPROVED SIMILAR.
2. ABANDON EXISTING SANITARY SEWER MANHOLE.
3. CONNECT SEWER PVC LATERAL SERVICE PER SPPWC STD PLAN 223-2 (CASE TYPE AS APPROPRIATE)
4. CONSTRUCT 8" PVC SEWER PIPE
5. ABANDON EXISTING SANITARY SEWER HOUSE CONNECTION

NOT USED ON THIS SHEET

COURSE DATA		
NO.	℄ LENGTH	BEARING
1	27.00'	N43° 58'24"W

SRJV RELEASED FOR EARLY CONSTRUCTION APPROVED BY DATE 6/8/12

4' 0 4' 8'
VERTICAL GRAPHIC SCALE
20' 10' 0 20' 40'
HORIZONTAL GRAPHIC SCALE

REV	DATE	BY	APP	REG NO	EXPIRES	SEAL HOLDER	DESCRIPTION
0	5/21/12	RG	JFH	C50189	06/30/13	JAMES F. HAYES	APPROVED FOR CONSTRUCTION

REVISION DATES (DESIGN STAGE ONLY)

DESIGNED BY R. GONZALEZ
DRAWN BY R. GONZALEZ
CHECKED BY K. YAMAKAWA
IN CHARGE J. HAYES
DATE 5/21/12

REGISTERED PROFESSIONAL ENGINEER JAMES F. HAYES No. C50189 Exp. 06-30-13 CIVIL STATE OF CALIFORNIA

Exposition Metro Line Construction Authority
Expo
EXPO SKANSKA RADOS
444 South Flower Street
Suite 2200
Los Angeles, CA 90071
TEL (213) 443-7463
FAX (213) 362-9481

PARSONS BRINCKERHOFF
CURRENT STATUS

EXPOSITION LRT PROJECT- PHASE 2
SEWER REARRANGEMENTS
PLAN & PROFILE
STA 12+50 TO STA 15+50

CONTRACT NO XP8902-002
DRAWING NO US-3C-303 REV 0
SCALE HOR: 1"=20' VERT: 1"=4'
SHEET NO

GonzalezR 2:38:40 PM 5/18/2012
Plot Driver=EXPO2-Full-BW-pdf.plt Pentable=EXPO2-PENTABLE.tbl C:\EXPO2\Batch Plot\3C\expo2-US-3C-303.plg

SCALES HORIZ SCALE: 1"=20' VERT SCALE: 1"=4'
SHEET
INDEX NUMBER

CITY DRAWING NO. U9203
SHEET NO. 7 OF 11 TOT.
DATE 5-30 2012
APPROVED BY: LEON E. SWAIN, P.E., CITY ENGINEER
REFERENCE:
SUBMITTED BY:
REVIEWED: DATE: 5/28 2012
REVIEWED: DATE: 5/29 2012
REVIEWED: DATE: 20
REVISIONS: NO. DATE BY DESCRIPTION APPROVED

City of Santa Monica
Department of Public Works
1437 4th Street, Suite 300 Santa Monica, CA 90401
TEL. (310)458-8721 FAX. (310)393-4425
e-mail : smengineering@smgov.net

Plotted by: GonzalezR 5/18/2012 C:\EXPO2\Batch Plot\3C\expo2-US-3C-303.plg

Sheet Version 2.01

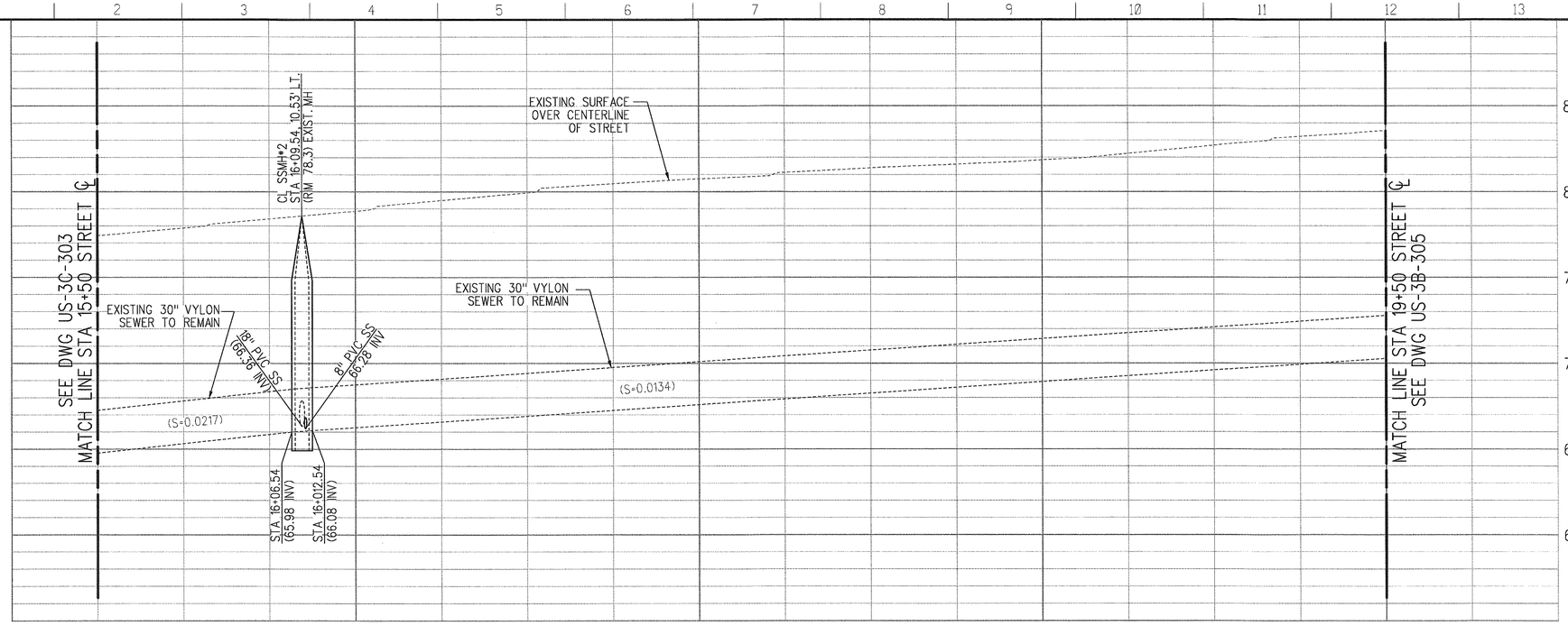

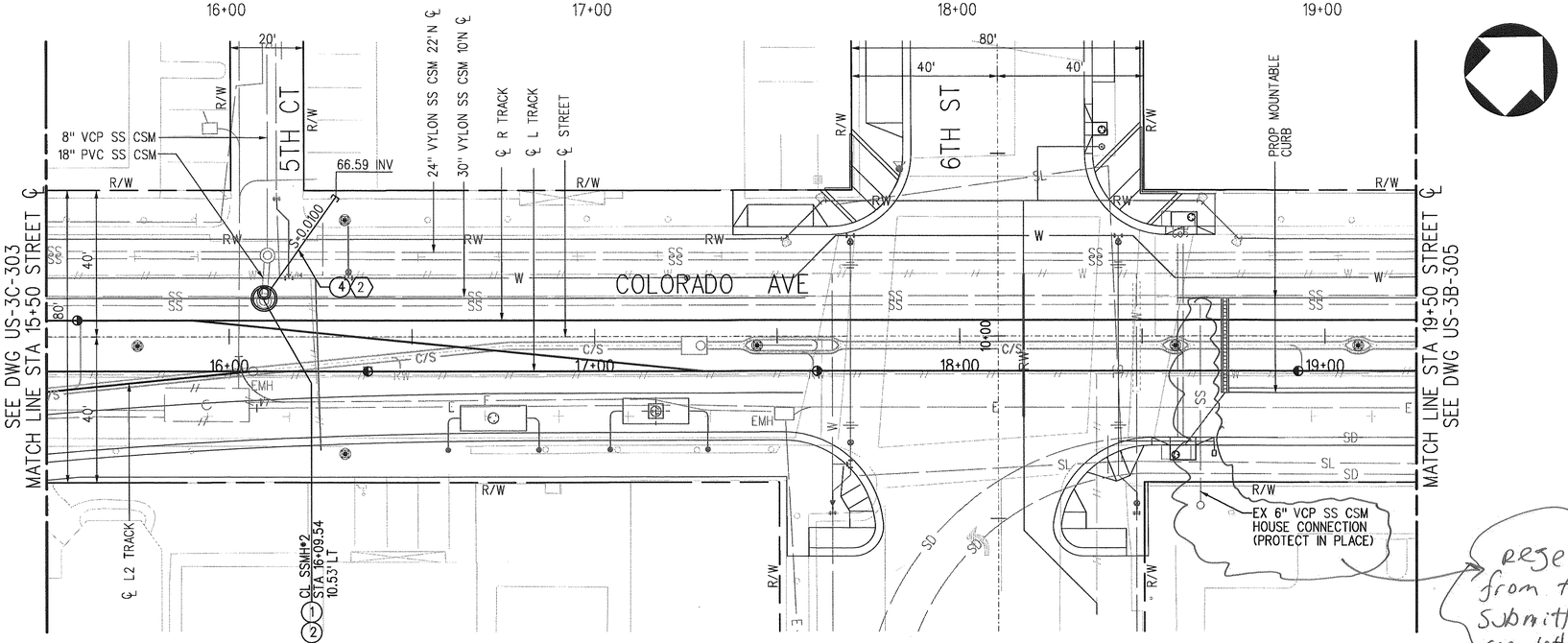

resected from this submittal see letter 5/29/12

NOTES:

1. SEE STREET PLANS FOR PROP STREET IMPROVEMENTS.
2. SEE WATER PLANS FOR FOR PROP DOMESTIC WATER IMPROVEMENTS
3. SEE RECLAIMED WATER PLANS FOR FOR PROP RECLAIMED WATER IMPROVEMENTS
4. SEE COMPOSITE UTILITY REARRANGEMENT PLANS (UR SHEETS) FOR PROPOSED & EXISTING UTILITY LOCATIONS.
5. SEE DRAINAGE PLANS FOR PROPOSED DRAINAGE.
6. SEE STREET LIGHTING PLANS FOR EXACT LOCATIONS AND DETAILS.
7. RECONNECT EXISTING LATERAL/HOUSE CONNECTIONS (WHERE NECESSARY).
8. FOR SPECIFIC SEWER MANHOLE GEOMETRIC DETAILS, REFER TO PLAN NUMBER US-3B-402.
9. FOR SEWER PIPE BEDDING DETAILS REFER TO CITY OF SANTA MONICA APPROVED MATERIAL SUBMITTAL.
10. PORTIONS OF THE ABANDONED UTILITIES WITHIN 12" VERTICAL SEPARATION FROM NEW UTILITIES SHALL BE REMOVED AS NECESSARY PER DIRECTION OF AUTHORITY HAVING JURISDICTION.

NOTE: CONTRACTOR TO VERIFY EXISTING INVERT PRIOR TO CONSTRUCTION. IF DISCREPENCY ARISES, CONTRACTOR SHALL CONTACT ENGINEER OF RECORD.

NOTE: EXISTING SEWER LATERALS ARE APPROXIMATE PER CITY OF SANTA MONICA SEWER ATLAS. LOCATIONS TO BE CONFIRMED IN FIELD.

CONSTRUCTION NOTES:

1. CONSTRUCT SEWER MANHOLE PER SPPWC STD PLAN NO. 200-3 (MODIFIED FOR I.D.=6') WITH FRAME AND COVER PER SPPWC STD PLAN 632-3 FOR A 30" COVER. INTERIOR OF PRECAST MANHOLE SHALL BE LINED WITH AMERON (WHITE) PVC T-LOCK LINER OR APPROVED SIMILAR.
2. ABANDON EXISTING SANITARY SEWER MANHOLE.
3. CONNECT SEWER PVC LATERAL SERVICE PER SPPWC STD PLAN 223-2 (CASE TYPE AS APPROPRIATE)
4. CONSTRUCT 8" PVC SEWER PIPE
5. ABANDON EXISTING SANITARY SEWER HOUSE CONNECTION

NOT USED ON THIS SHEET

COURSE DATA		
NO.	℄ LENGTH	BEARING
2	31.14'	N08° 37'57"W

SRJW
RELEASED FOR EARLY CONSTRUCTION
APPROVED 6/8/12

4' 0 4' 8'
VERTICAL GRAPHIC SCALE
20' 10' 0 20' 40'
HORIZONTAL GRAPHIC SCALE

REV	DATE	BY	APP	REG NO	EXPIRES	SEAL HOLDER	DESCRIPTION
0	5/21/12	RG	JFH	C50189	06/30/13	JAMES F. HAYES	APPROVED FOR CONSTRUCTION

REVISION DATE (DESIGN STAGE ONLY)

DESIGNED BY R. GONZALEZ
DRAWN BY R. GONZALEZ
CHECKED BY K. YAMAKAWA
IN CHARGE J. HAYES
DATE 5/21/12

REGISTERED PROFESSIONAL ENGINEER JAMES F. HAYES No. C50189 Exp. 06-30-13 CIVIL STATE OF CALIFORNIA

Exposition Metro Line Construction Authority
Expo
EXPO SKANSKA RADOS
444 South Flower Street
Suite 2200
Los Angeles, CA 90071
TEL (213) 443-7463
FAX (213) 362-9481

PARSONS BRINCKERHOFF
CURRENT STATUS

EXPOSITION LRT PROJECT- PHASE 2
SEWER REARRANGEMENTS
PLAN & PROFILE
STA 15+50 TO STA 19+50

CONTRACT NO XP8902-002
DRAWING NO US-3C-304 REV 0
SCALE HOR: 1"=20' VERT: 1"=4'
SHEET NO

GonzalezR 2:38:42 PM 5/18/2012
Plot Driver=EXPO2-Full-BW-pdf.plt Pentable=EXPO2-PENTABLE.tbl
C:\EXPO2\Batch Plot\3C\expo2-US-3C-304.plg

SCALES HORIZ SCALE: 1"=20' VERT SCALE: 1"=4'
SHEET
INDEX NUMBER

Sheet Version 2.01

NO.	DATE	BY	REVISIONS DESCRIPTION

REFERENCE:
SUBMITTED BY:
CITY DRAWING NO. U9203
SHEET NO.
APPROVED BY: LEON E. SWAIN, P.E., CITY ENGINEER
DATE: 5-30 2012
ENGINEERING

REVIEWED: DATE: 5/29 2012
REVIEWED: DATE: 5/29 2012
REVIEWED: DATE: 20
CITY

APPROVED

City of Santa Monica
Department of Public Works
1437 4th Street, Suite 300 Santa Monica, CA 90401
TEL. (310)458-8721 FAX. (310)393-4425
e-mail : smengineering@smgov.net

Plotted by: GonzalezR 5/18/2012 C:\EXPO2\Batch Plot\3C\expo2-US-3C-304.plg

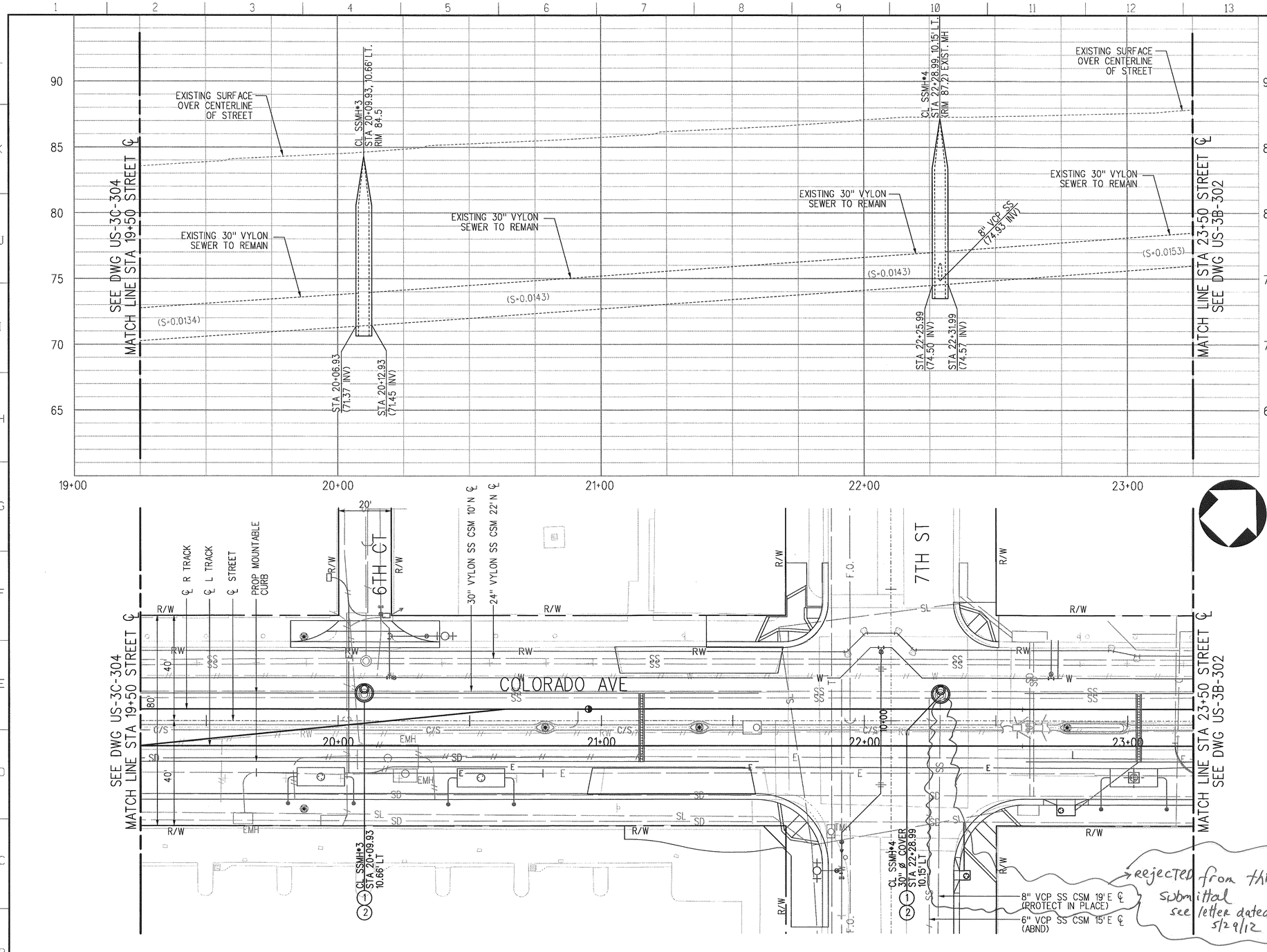

NOTES:

1. SEE STREET PLANS FOR PROP STREET IMPROVEMENTS.
2. SEE WATER PLANS FOR FOR PROP DOMESTIC WATER IMPROVEMENTS
3. SEE RECLAIMED WATER PLANS FOR FOR PROP RECLAIMED WATER IMPROVEMENTS
4. SEE COMPOSITE UTILITY REARRANGEMENT PLANS (UR SHEETS) FOR PROPOSED & EXISTING UTILITY LOCATIONS.
5. SEE DRAINAGE PLANS FOR PROPOSED DRAINAGE.
6. SEE STREET LIGHTING PLANS FOR EXACT LOCATIONS AND DETAILS.
7. RECONNECT EXISTING LATERAL/HOUSE CONNECTIONS (WHERE NECESSARY).
8. FOR SPECIFIC SEWER MANHOLE GEOMETRIC DETAILS, REFER TO PLAN NUMBER US-3B-402.
9. FOR SEWER PIPE BEDDING DETAILS REFER TO CITY OF SANTA MONICA APPROVED MATERIAL SUBMITTAL.
10. PORTIONS OF THE ABANDONED UTILITIES WITHIN 12" VERTICAL SEPARATION FROM NEW UTILITIES SHALL BE REMOVED AS NECESSARY PER DIRECTION OF AUTHORITY HAVING JURISDICTION.

NOTE: CONTRACTOR TO VERIFY EXISTING INVERT PRIOR TO CONSTRUCTION. IF DISCREPENCY ARISES, CONTRACTOR SHALL CONTACT ENGINEER OF RECORD.

NOTE: EXISTING SEWER LATERALS ARE APPROXIMATE PER CITY OF SANTA MONICA SEWER ATLAS. LOCATIONS TO BE CONFIRMED IN FIELD.

CONSTRUCTION NOTES:

1. CONSTRUCT SEWER MANHOLE PER SPPWC STD PLAN NO. 200-3 (MODIFIED FOR I.D.=6') WITH FRAME AND COVER PER SPPWC STD PLAN 632-3 FOR A 30" COVER. INTERIOR OF PRECAST MANHOLE SHALL BE LINED WITH AMERON (WHITE) PVC T-LOCK LINER OR APPROVED SIMILAR.
2. ABANDON EXISTING SANITARY SEWER MANHOLE.
3. CONNECT SEWER PVC LATERAL SERVICE PER SPPWC STD PLAN 223-2 (CASE TYPE AS APPROPRIATE)
4. CONSTRUCT 8" PVC SEWER PIPE
5. ABANDON EXISTING SANITARY SEWER HOUSE CONNECTION

NOT USED ON THIS SHEET

SRJV RELEASED FOR EARLY CONSTRUCTION APPROVED BY 6/8/12 DATE

REV	DATE	BY	APP	REG NO	EXPIRES	SEAL HOLDER	DESCRIPTION
0	5/21/12	RG	JFH	C50189	06/30/13	JAMES F. HAYES	APPROVED FOR CONSTRUCTION

DESIGNED BY R. GONZALEZ
DRAWN BY R. GONZALEZ
CHECKED BY K. YAMAKAWA
IN CHARGE J. HAYES
DATE 5/21/12

REGISTERED PROFESSIONAL ENGINEER JAMES F. HAYES No. C50189 Exp. 06-30-13 CIVIL STATE OF CALIFORNIA

Exposition Metro Line Construction Authority
Expo
EXPO SKANSKA RADOS
444 South Flower Street Suite 2200 Los Angeles, CA 90071 TEL (213) 443-7463 FAX (213) 362-9481
PARSONS BRINCKERHOFF
CURRENT STATUS

EXPOSITION LRT PROJECT- PHASE 2
SEWER REARRANGEMENTS
PLAN & PROFILE
STA 19+50 TO STA 23+50

CONTRACT NO XP8902-002
DRAWING NO US-3C-305 REV 0
SCALE HOR: 1"=20' VERT: 1"=4'
SHEET NO

GonzalezR 2:38:43 PM 5/18/2012
Plot Driver=EXPO2-Full-BW-pdf.plt Pentable=EXPO2-PENTABLE.tbl C:\EXPO2\Batch Plot\3C\expo2-US-3C-305.plg

SCALES HORIZ SCALE: 1"=20' VERT SCALE: 1"=4'
SHEET
INDEX NUMBER

REVISION DATE 5/18/2012
DESIGN STAGE DBM-YI

Sheet Version 2.01

NO.	DATE	BY	DESCRIPTION

REVISIONS

APPROVED

REVIEWED: DATE: 5/29 2012
RECOMMENDED: DATE: 5/29 2012
REVIEWED: DATE: 20

CITY

REFERENCE:
SUBMITTED BY:
APPROVED BY: LEON E. SWAIN, P.E., CITY ENGINEER — ENGINEERING

CITY DRAWING NO. U 9203
SHEET NO. SHT 9 OF 11 TOT
DATE: 5-12 20 12

City of Santa Monica
Department of Public Works
1437 4th Street, Suite 300 Santa Monica, CA 90401
TEL. (310)458-8721 FAX. (310)393-4425
e-mail : smengineering@smgov.net

Plotted by: GonzalezR 5/18/2012 C:\EXPO2\Batch Plot\3C\expo2-US-3C-305.plg

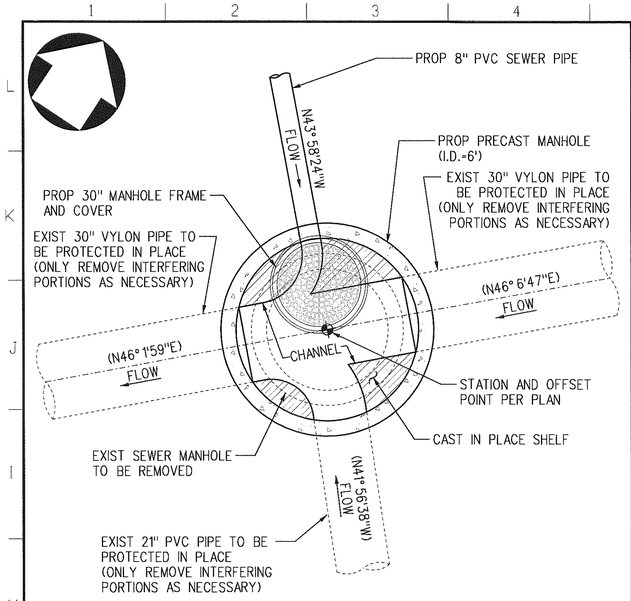

SEWER MANHOLE NO. 1 - BASE DETAIL (A / US-3C-303)

NO SCALE

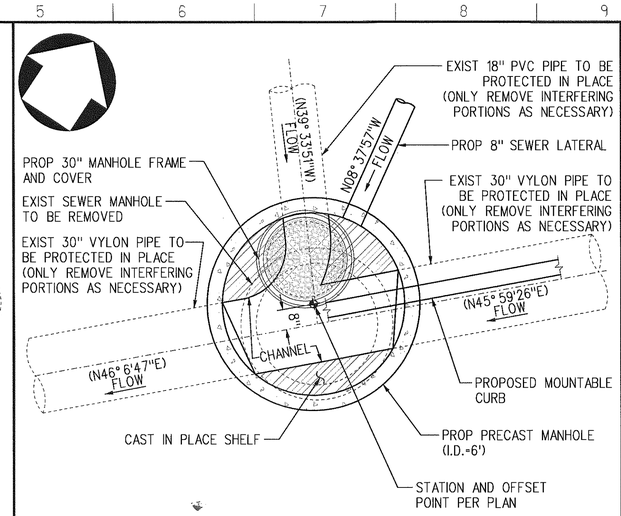

SEWER MANHOLE NO. 2 - BASE DETAIL (B / US-3C-304)

NO SCALE

ALL (N) SEWER MANHOLES TO BE T-LOCK LINED OR EQUAL.

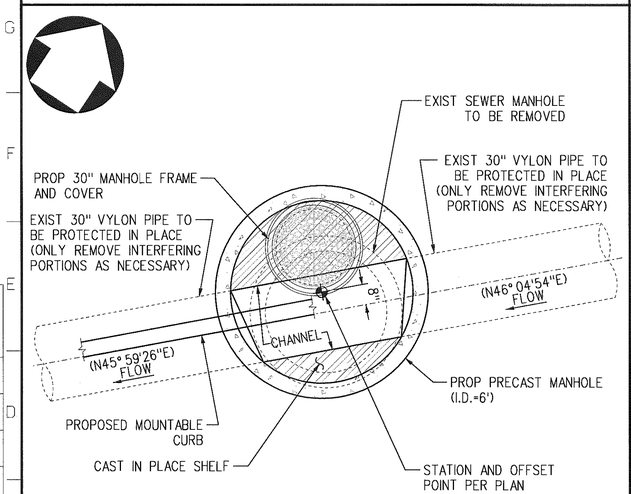

SEWER MANHOLE NO. 3 - BASE DETAIL (C / US-3C-305)

NO SCALE

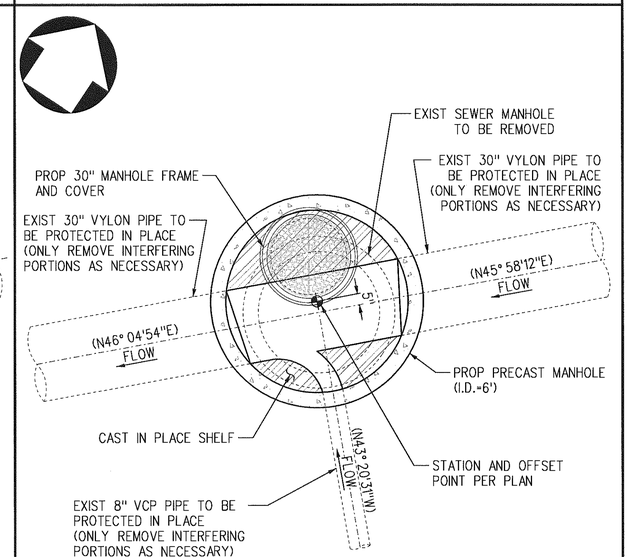

SEWER MANHOLE NO. 4 - BASE DETAIL (D / US-3C-305)

NO SCALE

SRJV RELEASED FOR EARLY CONSTRUCTION
APPROVED BY DATE

REV	DATE	BY	APP	REG NO	EXPIRES	SEAL HOLDER	DESCRIPTION
0	5/21/12	RG	JFH	C50189	06/30/13	JAMES F. HAYES	APPROVED FOR CONSTRUCTION

DESIGNED BY R. GONZALEZ
DRAWN BY R. GONZALEZ
CHECKED BY K. YAMAKAWA
IN CHARGE J. HAYES
DATE 5/21/12

REGISTERED PROFESSIONAL ENGINEER — JAMES F. HAYES — No. C50189 — Exp. 06-30-13 — CIVIL — STATE OF CALIFORNIA

Exposition Metro Line Construction Authority
Expo
EXPO SKANSKA RADOS
444 South Flower Street
Suite 2200
Los Angeles, CA 90071
TEL (213) 443-7463
FAX (213) 362-9481
PARSONS BRINCKERHOFF
CURRENT STATUS

EXPOSITION LRT PROJECT- PHASE 2
SEWER REARRANGEMENTS
SEWER DETAILS

CONTRACT NO XP8902-002
DRAWING NO US-3C-401 REV 0
SCALE NO SCALE
SHEET NO

GonzalezR 2:38:44 PM 5/18/2012
Plot Driver=EXPO2-Full-BW-pdf.plt Pentable=EXPO2-PENTABLE.tbl C:\EXPO2\Batch Plot\3C\expo2-US-3C-401.plg

SCALES HORIZ SCALE: VERT SCALE: SHEET INDEX NUMBER

REVISION DATES DESIGN STAGE ONLY

Sheet Version 2.01

CITY DRAWING NO U9203
SHEET NO: SHT 7 OF 11 TOT
DATE: 5-30-2012
APPROVED BY: LEON E. SWAIN, P.E., CITY ENGINEER
ENGINEERING
REFERENCE:
SUBMITTED BY:
REVIEWED: DATE: 5/29/2012
RECOMMENDED: DATE: 5/29/2012
REVIEWED: DATE: 20
CITY
APPROVED
REVISIONS
NO. DATE BY DESCRIPTION

City of Santa Monica
Department of Public Works
1437 4th Street, Suite 300 Santa Monica, CA 90401
TEL. (310)458-8721 FAX. (310)393-4425
e-mail : smengineering@smgov.net

Plotted by: GonzalezR 5/18/2012 C:\EXPO2\Batch Plot\3C\expo2-US-3C-401.plg

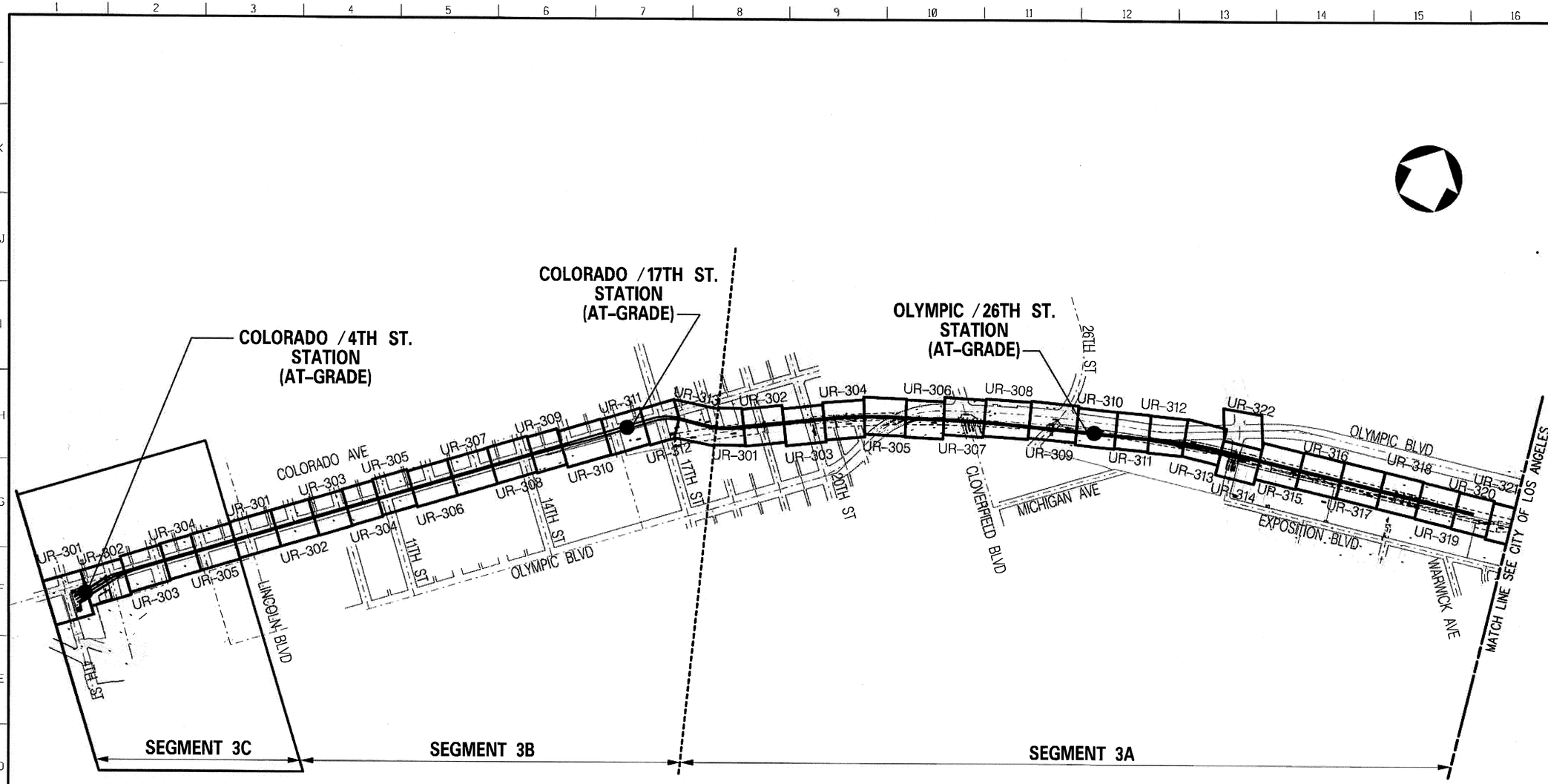

Please submit final record set of Utility Rearrangement Locations after construction of all utilities.

SRJV
MAR 29 2013
ISSUED FOR CONSTRUCTION

Exposition Construction Authority
Approved for Construction
Drawings - AFC
MAR 28 2013

FOR REFERENCE ONLY

REV	DATE	BY	APP	REG NO	EXPIRES	SEAL HOLDER	DESCRIPTION
0	12/7/12	KY	PWT	C43086	03/31/14	PETER W. TUCCILLO	APPROVED FOR CONSTRUCTION

DESIGNED BY R. GONZALEZ
DRAWN BY R. JONES
CHECKED BY K. YAMAKAWA
IN CHARGE P. TUCCILLO
DATE 12/7/12

REGISTERED PROFESSIONAL ENGINEER
PETER W. TUCCILLO
No. C43086
Exp. 03-31-14
CIVIL
STATE OF CALIFORNIA

Exposition Metro Line Construction Authority
Expo

EXPO SKANSKA RADOS
444 South Flower Street
Suite 2200
Los Angeles, CA 90071
TEL (213) 443-7463
FAX (213) 362-9481

PARSONS BRINCKERHOFF

EXPOSITION LRT PROJECT- PHASE 2
COMPOSITE UTILITY REARRANGEMENT
SEGMENT 3C
UTILITY KEY MAP
CITY OF SANTA MONICA

Exposition Construction Authority
Approved for Construction
Drawings - AFC
MAR 28 2013

CONTRACT NO XP8902-002
DRAWING NO UR-3C-300 REV 0
SCALE NO SCALE
SHEET NO 83 OF 108

yamakawa 10:23:39 AM 12/7/2012
Plot Driver=EXPO2-Half-BW-pdf.plt Pentable=EXPO2-PENTABLE.tbl
C:_Expo 2\YAMAKAWA\UR 3B\3B and 3C 100% - 12-7-12\expo2-UR-3C-300.plg

SCALES HORIZ SCALE: VERT SCALE:
SHEET
INDEX NUMBER

CURRENT STATUS

City of Santa Monica
Department of Public Works
1437 4th Street, Suite 300 Santa Monica, CA 90401
TEL. (310)458-8721 FAX. (310)393-4425
e-mail : smengineering@smgov.net

Plotted by: yamakawa 12/7/2012 C:_Expo 2\YAMAKAWA\UR 3B\3B and 3C 100% - 12-7-12\expo2-UR-3C-300.plg

Sheet Version 2.01

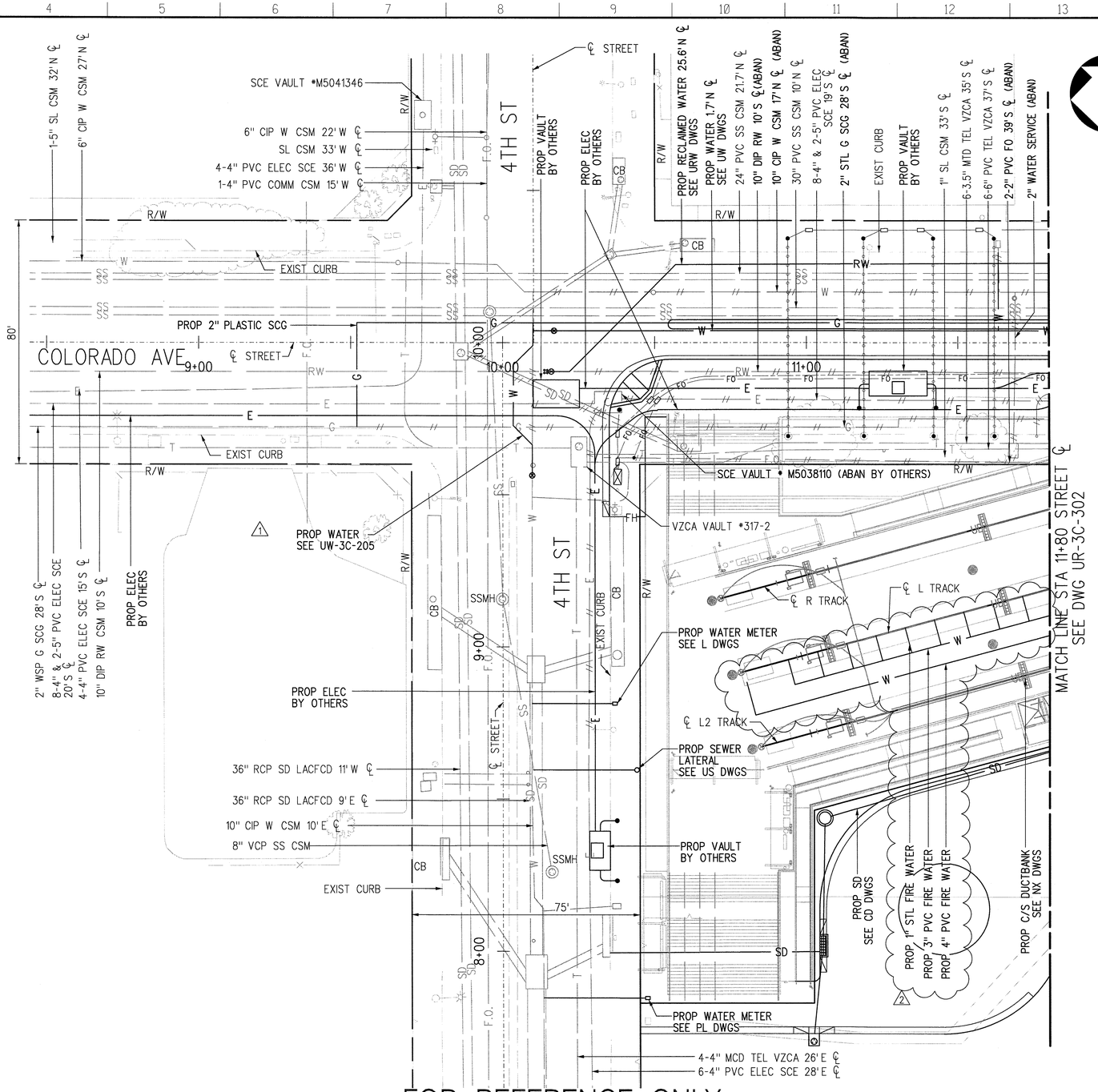

FOR REFERENCE ONLY

NOTES:

1. L TRACK IS TRACK 3 AND R TRACK IS TRACK 4.
2. SEE STREET IMPROVEMENT PLANS (CA) FOR HORIZONTAL AND VERTICAL STREET INFORMATION.
3. SEE STREET LIGHTING (SL) AND TRAFFIC SIGNAL (TR) PLANS FOR PROPOSED POLE AND FOUNDATION LOCATIONS AND DETAILS.
4. SEE LANDSCAPING PLANS (L) FOR IRRIGATION, PLANTING LOCATIONS AND DETAILS. TREE WELL LOCATIONS ARE CONCEPTUAL ONLY.
5. SEE DRAINAGE PLANS (CD) FOR PROPOSED TRACK UNDER DRAIN AND STORM DRAIN LOCATIONS AND DETAILS.
6. SEE SANITARY SEWER PLANS (US) FOR PROPOSED SEWER REARRANGEMENT AND ENCASEMENT LOCATIONS AND DETAILS.
7. SEE WATER PLANS (UW) FOR PROPOSED WATER REARRANGEMENT LOCATIONS AND DETAILS.
8. SEE RECLAIMED WATER PLANS (URW) FOR PROPOSED RECLAIMED WATER REARRANGEMENT LOCATIONS AND DETAILS.
9. SEE TRACKWORK PLANS (T) FOR TRACK RELATED WORK.
10. SEE RIGHT-OF-WAY PLANS FOR RIGHT-OF-WAY TAKE AND TEMPORARY CONSTRUCTION EASEMENT.
11. SEE DUCTBANK PLANS (NX) FOR LOCATIONS AND DETAILS.
12. SEE GUIDEWAY PLANS (GC) FOR FENCE REQUIREMENTS IN METRO R/W.
13. SEE GRADE CROSSING PLANS (GX) FOR LOCATIONS AND DETAILS.
14. SEE PLUMBING PLANS (PL) AND FIRE PROTECTION PLANS (FP) FOR WATER AND FIRE SERVICE P.O.C. LOCATIONS AND DETAILS.
15. SEE STRUCTURAL PLANS FOR RETAINING WALL (LW), SOUND WALL (SW), STATION AND BRIDGE (S) LOCATIONS AND DETAILS.
16. SEE OVERHEAD CONTACT SYSTEM PLANS (OCS) FOR OVERHEAD CONTACT POLE LOCATIONS AND DETAILS.
17. UNLESS OTHERWISE INDICATED, ALL UTILITIES ARE TO BE PROTECTED IN PLACE.

SRJV
APR 24 2014
ISSUED FOR CONSTRUCTION

Exposition Construction Authority
Approved for Construction
Drawings - AFC
APR 24 2014

20' 10' 0 20' 40'

REV	DATE	BY	APP	REG NO	EXPIRES	SEAL HOLDER	DESCRIPTION
2	10/9/13	KY	PWT	C43086	3/31/14	PETER W. TUCCILLO	ECI 43
1	5/9/13	KY	PWT	C43086	3/31/14	PETER W. TUCCILLO	ECI 12
0	12/7/12	KY	PWT	C43086	3/31/14	PETER W. TUCCILLO	APPROVED FOR CONSTRUCTION

REVISION DATES (DESIGN STAGE ONLY)

DESIGNED BY R. GONZALEZ
DRAWN BY R. JONES
CHECKED BY K. YAMAKAWA
IN CHARGE P. TUCCILLO
DATE 12/7/12

REGISTERED PROFESSIONAL ENGINEER — PETER W. TUCCILLO — No. C43086 — Exp. 03-31-14 — CIVIL — STATE OF CALIFORNIA

Exposition Metro Line Construction Authority
Expo

EXPO SKANSKA RADOS
444 South Flower Street
Suite 2200
Los Angeles, CA 90071
TEL (213) 443-7463
FAX (213) 362-9481

PARSONS BRINCKERHOFF
CURRENT STATUS

EXPOSITION LRT PROJECT- PHASE 2
COMPOSITE UTILITY REARRANGEMENT
COLORADO AVE / 4TH ST
PLAN
STA 8+50 TO STA 11+80

CONTRACT NO XP8902-002
DRAWING NO UR-3C-301 REV 2
SCALE 1" = 20'
SHEET NO 84 OF 108

Yamakawa 10:22:08 AM 11/5/2013
Plot Driver=EXPO2-PDF-Full-BW.plt Pentable=EXPO2-PENTABLE.tbl
c:\projectwise\pb\projectwiseint\kyamakawa\dms09108\expo2-UR-3C-301.plg

SCALES HORIZ SCALE: VERT SCALE:
SHEET
INDEX NUMBER

Sheet Version 2.01

CITY DRAWING NO. U9213
SHEET NO. 84 OF 108
DATE 4/16/2014
APPROVED BY: LEON E. SWAIN, P.E., CITY ENGINEER
REFERENCE:
SUBMITTED BY:
REVIEWED: DATE: 20
REVIEWED: DATE: 4/18/2014
REVIEWED: DATE: 4/18/2014
APPROVED CITY

NO.	DATE	BY	DESCRIPTION
			REVISIONS

City of Santa Monica
Department of Public Works
1437 4th Street, Suite 300 Santa Monica, CA 90401
TEL. (310)458-8721 FAX. (310)393-4425
e-mail : smengineering@smgov.net

Plotted by: Yamakawa 11/5/2013 c:\projectwise\pb\projectwiseint\kyamakawa\dms09108\expo2-UR-3C-301.plg

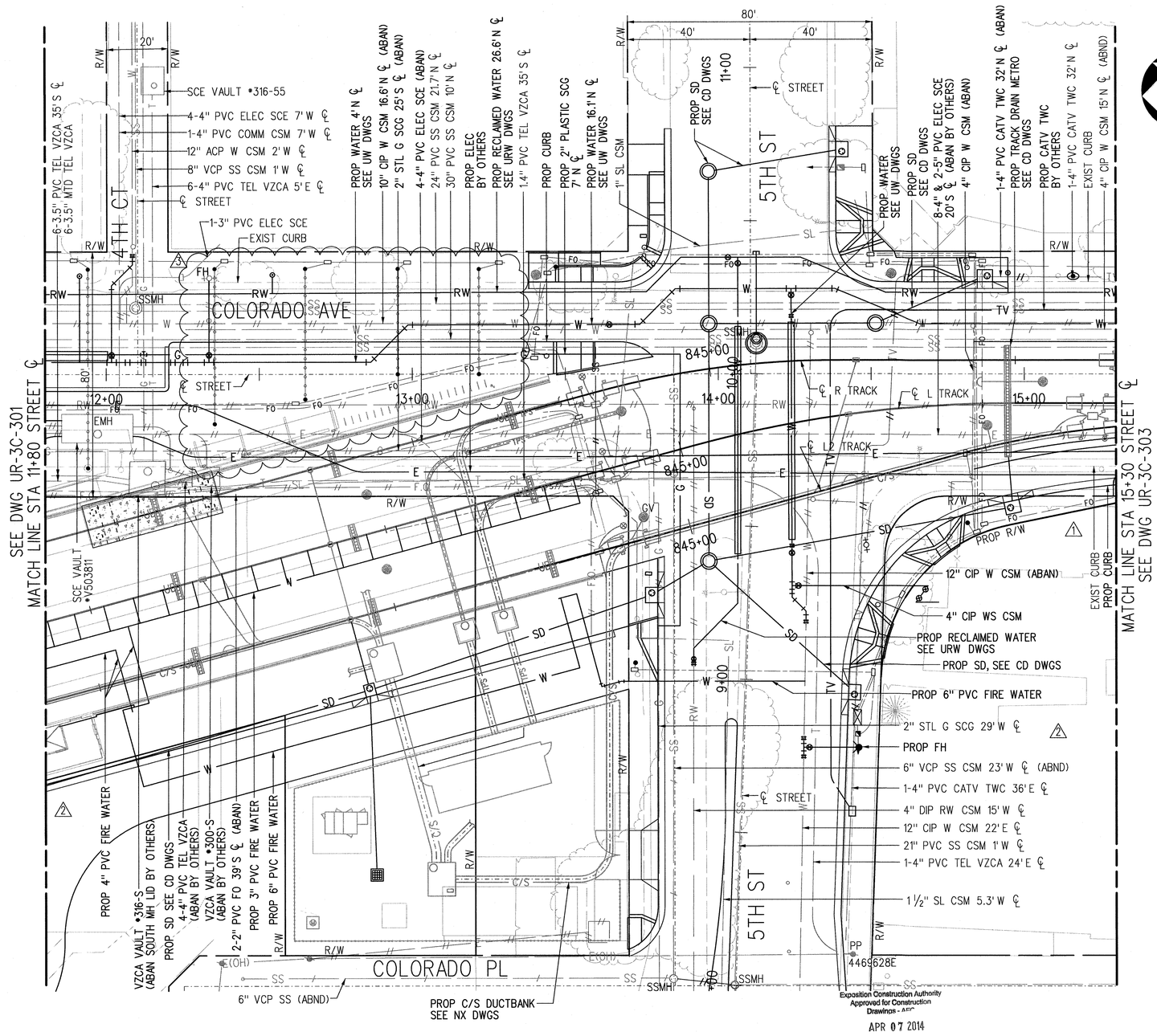

SRJV
APR 14 2014
ISSUED FOR CONSTRUCTION

20' 10' 0 20' 40'

FOR REFERENCE ONLY

REV	DATE	BY	APP	REG NO	EXPIRES	SEAL HOLDER	DESCRIPTION
3	3/20/14	KY	PWT	C43086	03/31/14	PETER W. TUCCILLO	ECI 93
2	12/6/13	KY	PWT	C43086	03/31/14	PETER W. TUCCILLO	ECI 43
1	9/11/13	KY	PWT	C43086	03/31/14	PETER W. TUCCILLO	ECI 22
0	12/7/12	KY	PWT	C43086	03/31/14	PETER W. TUCCILLO	APPROVED FOR CONSTRUCTION

REVISION DATES (DESIGN STAGE ONLY)

DESIGNED BY R. GONZALEZ
DRAWN BY R. JONES
CHECKED BY K. YAMAKAWA
IN CHARGE P. TUCCILLO
DATE 12/7/12

REGISTERED PROFESSIONAL ENGINEER PETER W. TUCCILLO No. C43086 Exp. 03-31-16 CIVIL STATE OF CALIFORNIA

Exposition Metro Line Construction Authority
Expo
EXPO SKANSKA RADOS
444 South Flower Street
Suite 2200
Los Angeles, CA 90071
TEL (213) 443-7463
FAX (213) 362-9481

PARSONS BRINCKERHOFF

CURRENT STATUS

EXPOSITION LRT PROJECT- PHASE 2
COMPOSITE UTILITY REARRANGEMENT
COLORADO AVE / 5TH ST
PLAN
STA 11+80 TO STA 15+30

CONTRACT NO XP8902-002
DRAWING NO UR-3C-302 REV 3
SCALE 1" = 20'
SHEET NO 85 OF 108

Yamakawa 11:41:15 AM 3/20/2014
Plot Driver=EXPO2-PDF-Full-BW.plt Pentable=EXPO2-PENTABLE.tbl
c:\projectwise\pb\projectwiseint\kyamakawa\dms09108\expo2-UR-3C-302.plg

SCALES HORIZ SCALE: VERT SCALE:
SHEET
INDEX NUMBER

Sheet Version 2.01

CITY DRAWING NO. U9213
SHEET NO. 85 OF 108
DATE 4-4 2014

SUBMITTED BY:
APPROVED BY: LEON E. SWAIN, P.E. CITY ENGINEER
REFERENCE:
REVIEWED: DATE 4-4 2014
REVIEWED: DATE 4-4 2014
REC'D: DATE 4-4 2014

NO.	DATE	BY	REVISIONS DESCRIPTION	APPROVED

City of Santa Monica
Department of Public Works
1437 4th Street, Suite 300 Santa Monica, CA 90401
TEL. (310)458-8721 FAX. (310)393-4425
e-mail : smengineering@smgov.net

Plotted by: Yamakawa 3/20/2014 c:\projectwise\pb\projectwiseint\kyamakawa\dms09108\expo2-UR-3C-302.plg

ECI #00057 - PENDING

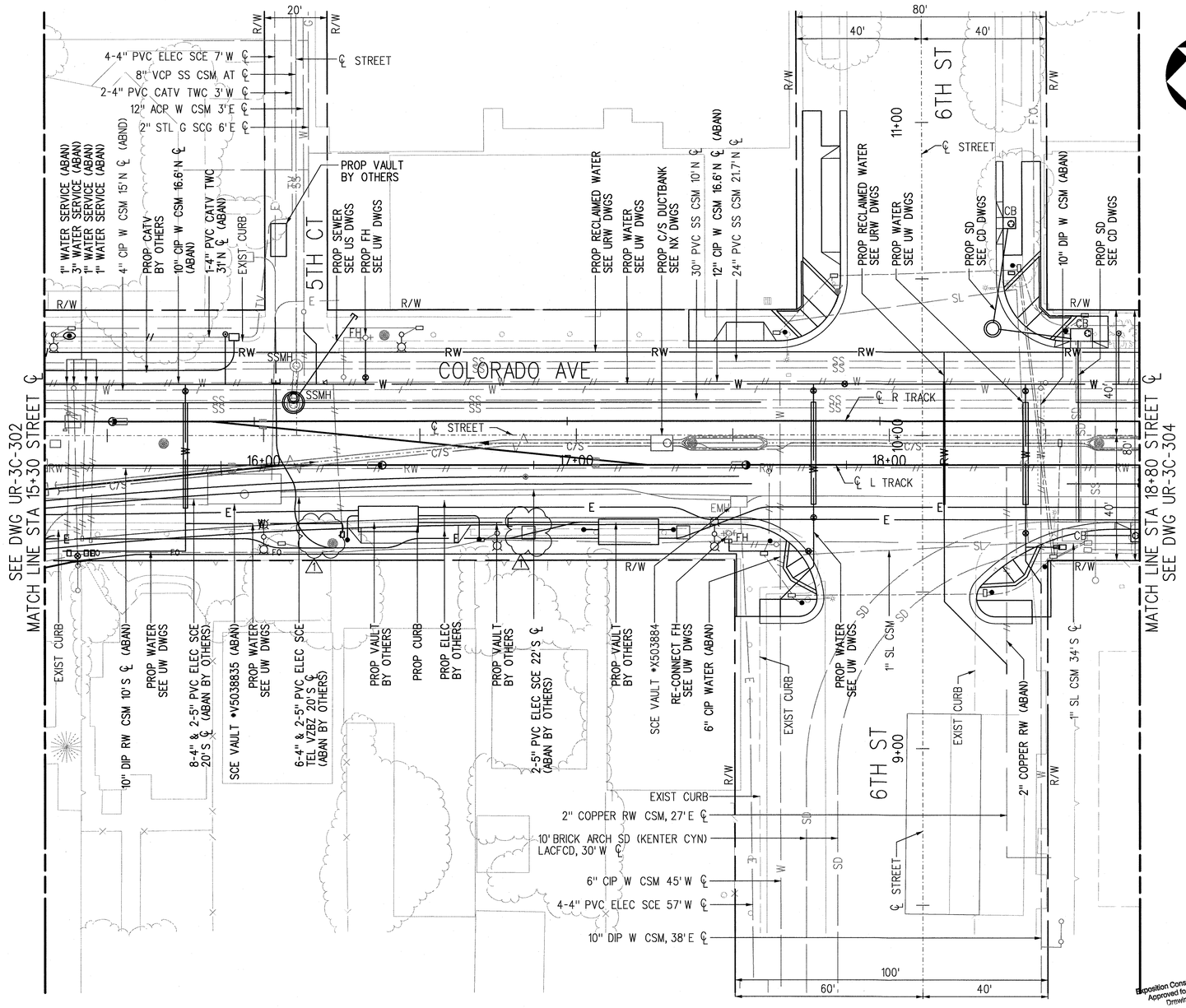

SRJV
OCT 09 2013
ISSUED FOR CONSTRUCTION

Exposition Construction Authority
Approved for Construction
Drawings - AFC
OCT 07 2013

20' 10' 0 20' 40'

FOR REFERENCE ONLY

REV	DATE	BY	APP	REG NO	EXPIRES	SEAL HOLDER	DESCRIPTION
1	9/11/13	KY	PWT	C43086	03/31/14	PETER W. TUCCILLO	ECI 22
0	12/7/12	KY	PWT	C43086	03/31/14	PETER W. TUCCILLO	APPROVED FOR CONSTRUCTION

REVISION DATES (DESIGN STAGE ONLY)

DESIGNED BY R. GONZALEZ
DRAWN BY R. JONES
CHECKED BY K. YAMAKAWA
IN CHARGE P. TUCCILLO
DATE 12/7/12

REGISTERED PROFESSIONAL ENGINEER PETER W. TUCCILLO No. C43086 Exp. 03-31-14 CIVIL STATE OF CALIFORNIA

Exposition Metro Line Construction Authority
Expo
EXPO SKANSKA RADOS
444 South Flower Street
Suite 2200
Los Angeles, CA 90071
TEL (213) 443-7463
FAX (213) 362-9481

PARSONS BRINCKERHOFF

CURRENT STATUS

EXPOSITION LRT PROJECT- PHASE 2
COMPOSITE UTILITY REARRANGEMENT
COLORADO AVE / 6TH ST
PLAN
STA 15+30 TO STA 18+80

CONTRACT NO XP8902-002
DRAWING NO UR-3C-303 REV 1
SCALE 1" = 20'
SHEET NO 86 OF 108

HernandezH 4:07:55 PM 9/11/2013
Plot Driver=EXPO2-Full-BW-pdf.plt
Pentable=EXPO2-PENTABLE.tbl
C:\Users\hernandezh\Desktop\UR-Kevin\expo2-UR-3C-303.plg

SCALES HORIZ SCALE: VERT SCALE:
SHEET
INDEX NUMBER

Sheet Version 2.01

REFERENCE :
SUBMITTED BY:
CITY DRAWING NO. U9213
SHEET NO. 86 OF 108
DATE : 9-26 2013
APPROVED BY: LEON E. SWAIN, P.E., CITY ENGINEER
ENGINEERING

REVIEWED : DATE : 20__
REVIEWED : DATE : 9-26 2013
REVIEWED : DATE : 9-26 2013
CITY

NO.	DATE	BY	DESCRIPTION

REVISIONS APPROVED

City of Santa Monica
Department of Public Works
1437 4th Street, Suite 300 Santa Monica, CA 90401
TEL. (310)458-8721 FAX. (310)393-4425
e-mail : smengineering@smgov.net

Plotted by: HernandezH 9/11/2013 C:\Users\hernandezh\Desktop\UR-Kevin\expo2-UR-3C-303.plg

ECI #00057 - PENDING

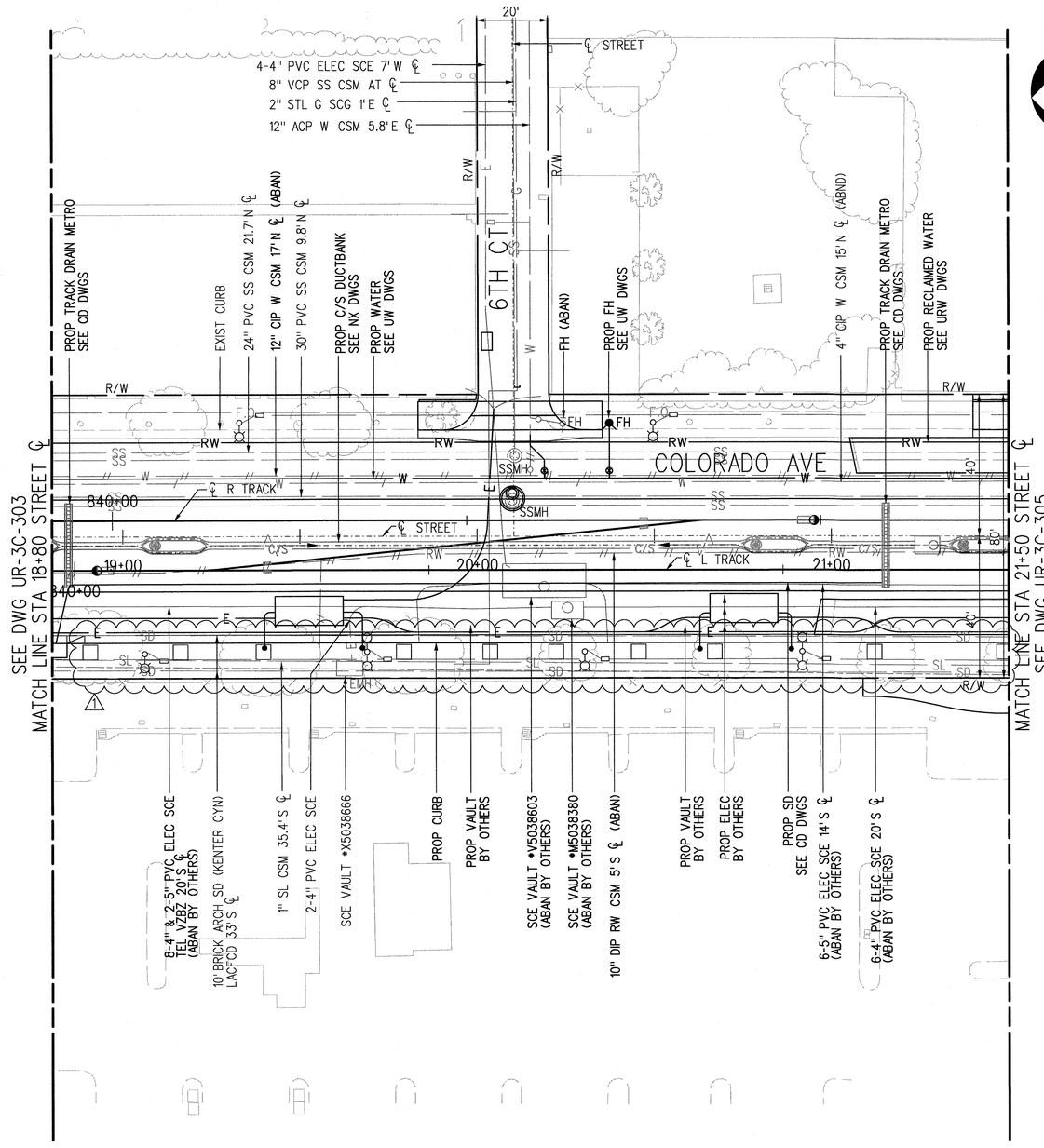

SRJV
OCT 09 2013
ISSUED FOR CONSTRUCTION

Exposition Construction Authority
Approved for Construction
Drawings - AFC
OCT 07 2013

20' 10' 0 20' 40'

FOR REFERENCE ONLY

REV	DATE	BY	APP	REG NO	EXPIRES	SEAL HOLDER	DESCRIPTION
1	9/11/13	KY	PWT	C43086	03/31/14	PETER W. TUCCILLO	ECI 22
0	12/7/12	KY	PWT	C43086	03/31/14	PETER W. TUCCILLO	APPROVED FOR CONSTRUCTION

DESIGNED BY R. GONZALEZ
DRAWN BY R. JONES
CHECKED BY K. YAMAKAWA
IN CHARGE P. TUCCILLO
DATE 12/7/12

REGISTERED PROFESSIONAL ENGINEER
PETER W. TUCCILLO
No. C43086
Exp. 03-31-14
CIVIL
STATE OF CALIFORNIA

Exposition Metro Line Construction Authority
Expo

EXPO SKANSKA RADOS
444 South Flower Street
Suite 2200
Los Angeles, CA 90071
TEL (213) 443-7463
FAX (213) 362-9481

PARSONS BRINCKERHOFF

CURRENT STATUS

EXPOSITION LRT PROJECT- PHASE 2
COMPOSITE UTILITY REARRANGEMENT
COLORADO AVE
PLAN
STA 18+80 TO STA 21+50

CONTRACT NO XP8902-002
DRAWING NO UR-3C-304 REV 1
SCALE 1" = 20'
SHEET NO 87 OF 108

HernandezH 4:07:58 PM 9/11/2013
Plot Driver=EXPO2-Full-BW-pdf.plt Pentable=EXPO2-PENTABLE.tbl
C:\Users\hernandezh\Desktop\UR-Kevin\expo2-UR-3C-304.plg

SCALES HORIZ SCALE: VERT SCALE:
SHEET
INDEX NUMBER

REVISION DATES (DESIGN STAGE ONLY)

Sheet Version 2.01

City of Santa Monica
Department of Public Works
1437 4th Street, Suite 300 Santa Monica, CA 90401
TEL. (310)458-8721 FAX. (310)393-4425
e-mail : smengineering@smgov.net

Plotted by: HernandezH 9/11/2013 C:\Users\hernandezh\Desktop\UR-Kevin\expo2-UR-3C-304.plg

REVIEWED : DATE : 20
REVIEWED : DATE : 9-26 2013
REVIEWED : DATE : 9-26 2013
CITY
REFERENCE :
SUBMITTED BY:
APPROVED BY: LEON E. SWAIN, P.E., CITY ENGINEER
CITY DRAWING NO. U9213
SHEET NO.: 87 OF 108
DATE : 9-26 2013
ENGINEERING

REVISIONS
NO. DATE BY DESCRIPTION APPROVED

ECI #00057 - PENDING

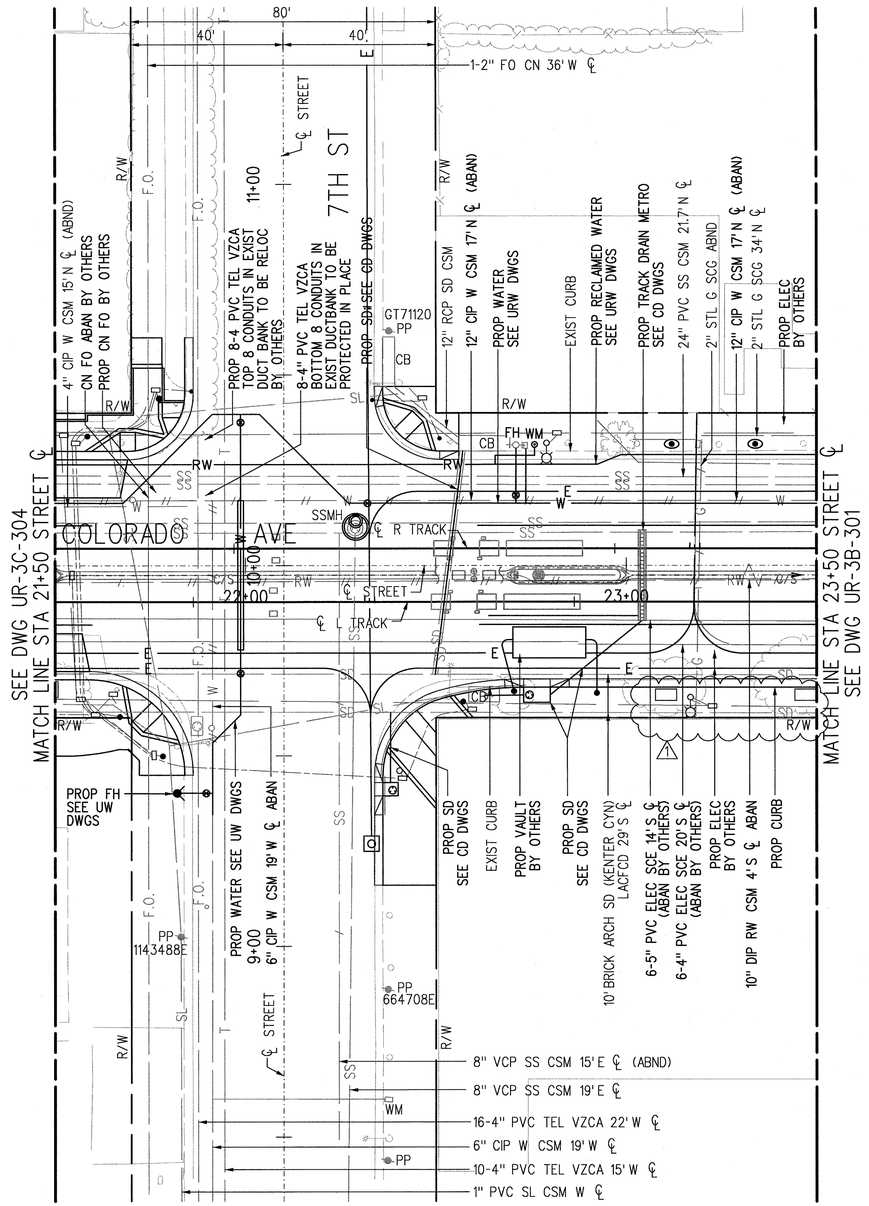

SRJV
OCT 09 2013
ISSUED FOR CONSTRUCTION

Exposition Construction Authority
Approved for Construction
Drawings - AFC
OCT 07 2013

20' 10' 0 20' 40'

FOR REFERENCE ONLY

REV	DATE	BY	APP	REG NO	EXPIRES	SEAL HOLDER	DESCRIPTION
1	9/11/13	KY	PWT	C43086	03/31/14	PETER W. TUCCILLO	ECI 22
0	12/7/12	KY	PWT	C43086	03/31/14	PETER W. TUCCILLO	APPROVED FOR CONSTRUCTION

REVISION DATES (DESIGN STAGE ONLY)

DESIGNED BY R. GONZALEZ
DRAWN BY R. JONES
CHECKED BY K. YAMAKAWA
IN CHARGE P. TUCCILLO
DATE 12/7/12

REGISTERED PROFESSIONAL ENGINEER PETER W. TUCCILLO No. C43086 Exp. 03-31-14 CIVIL STATE OF CALIFORNIA

Exposition Metro Line Construction Authority
Expo
EXPO SKANSKA RADOS
444 South Flower Street
Suite 2200
Los Angeles, CA 90071
TEL (213) 443-7463
FAX (213) 362-9481

PARSONS BRINCKERHOFF

CURRENT STATUS

EXPOSITION LRT PROJECT- PHASE 2
COMPOSITE UTILITY REARRANGEMENT
COLORADO AVE
PLAN
STA 21+50 TO STA 23+50

CONTRACT NO XP8902-002
DRAWING NO UR-3C-305 REV 1
SCALE 1" = 20'
SHEET NO 88 OF 108

HernandezH 4:08:01 PM 9/11/2013
Plot Driver=EXPO2-Full-BW-pdf.plt Pentable=EXPO2-PENTABLE.tbl
C:\Users\hernandezh\Desktop\UR-Kevin\expo2-UR-3C-305.plg

SCALES HORIZ SCALE: VERT SCALE:
SHEET
INDEX NUMBER

Sheet Version 2.01

REFERENCE:
SUBMITTED BY:
CITY DRAWING NO. U9213
SHEET NO.: 88 OF 108
APPROVED BY: LEON E. SWAIN, P.E., CITY ENGINEER DATE: 9-26 2013
ENGINEERING

REVIEWED: DATE: 20
REVIEWED: DATE: 9-26 2013
REVIEWED: DATE: 9-26 2013
CITY

REVISIONS
NO. DATE BY DESCRIPTION
APPROVED

City of Santa Monica
Department of Public Works
1437 4th Street, Suite 300 Santa Monica, CA 90401
TEL. (310)458-8721 FAX. (310)393-4425
e-mail : smengineering@smgov.net

Plotted by: HernandezH 9/11/2013 C:\Users\hernandezh\Desktop\UR-Kevin\expo2-UR-3C-305.plg

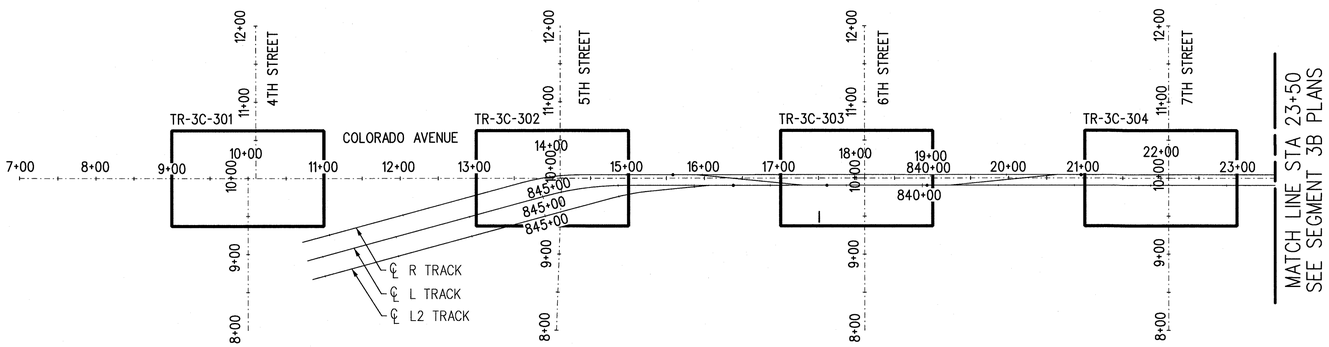

Exposition Construction Authority
Approved for Construction
Drawings - AFC
AUG 22 2013

SRJV
AUG 23 2013
ISSUED FOR CONSTRUCTION

100' 0 100' 200'

REV	DATE	BY	APP	REG NO	EXPIRES	SEAL HOLDER	DESCRIPTION
0	10/19/12	IC	JJM	C65218	09-30-13	JASON J. MELCHOR	APPROVED FOR CONSTRUCTION

DESIGNED BY I. CONSTANTINESCU
DRAWN BY R. CHICHIRI
CHECKED BY J. MELCHOR
IN CHARGE D. ADRIAN
DATE 10/19/12

REGISTERED PROFESSIONAL ENGINEER
JASON J. MELCHOR
No. C65218
Exp. 09-30-13
CIVIL
STATE OF CALIFORNIA

Exposition Metro Line Construction Authority
Expo

EXPO SKANSKA RADOS
444 South Flower Street
Suite 2200
Los Angeles, CA 90071
TEL (213) 443-7463
FAX (213) 362-9481

PARSONS BRINCKERHOFF
Kimley-Horn and Associates, Inc.
660 SOUTH FIGUEROA STREET
SUITE 1040
LOS ANGELES, CA 90017
TEL (213) 261-9040

EXPOSITION LRT PROJECT- PHASE 2
TRAFFIC SIGNAL
COLORADO AVENUE
KEY MAP
STA 7+50 TO 23+50

CONTRACT NO XP8902-002
DRAWING NO TRK-3C-301 REV 0
SCALE 1"=100'
SHEET NO 94 OF 108

justin.gatza 2:16:51 PM 10/18/2012
Plot Driver=EXPO2-PDF-Full-BW.plt Pentable=EXPO2-PENTABLE.tbl

K:\LDT_RDWY\094617000 - Expo Ph 2\Working\04 BATCH PLOT\Temp Export Files from PW\Traffic\expo2-trk-3c-301.plg

SCALES HORIZ SCALE: 1"=100' VERT SCALE: NO SCALE

SHEET

INDEX NUMBER

REVISION DATES (DESIGN STAGE ONLY)

Sheet Version 2.01

REFERENCE :
SUBMITTED BY: Doug DeVinist
CITY DRAWING NO. 9104
SHEET NO.: 94 OF 108
APPROVED BY :
DATE : 8-19 2013
SAM MORRISSEY, P.E., CITY TRAFFIC ENGINEER
PLANNING AND COMMUNITY DEVELOPMENT

REVIEWED : DATE : 20
REVIEWED : DATE : 20
REVIEWED : DATE : 8-19 2013
CITY

NO.	DATE	BY	DESCRIPTION	APPROVED
			REVISIONS	

City of Santa Monica
Department of Public Works
1437 4th Street, Suite 300 Santa Monica, CA 90401
TEL. (310)458-8721 FAX. (310)393-4425
e-mail : smengineering@smgov.net

Plotted by: justin.gatza 10/18/2012 K:\LDT_RDWY\094617000 - Expo Ph 2\Working\04 BATCH PLOT\Temp Export Files from PW\Traffic\expo2-trk-3c-301.plg

GENERAL NOTES:

DRFI 10373

1. ALL WORK DETAILED ON THIS CONSTRUCTION DRAWING SHALL BE IN ACCORDANCE WITH ~~2010~~ 2006 CALTRANS STANDARD PLANS, SSPWC, AND CITY OF SANTA MONICA STANDARD PLANS.
2. THE CITY OF SANTA MONICA TRAFFIC SIGNAL SECTION AT (310) 458-8520 OR TRANSPORATION.MGMT@SMGOV.NET SHALL BE NOTIFIED THREE (3) WORKING DAYS PRIOR TO THE BEGINNING OF CONSTRUCTION.
3. REGULAR TRAFFIC SIGNAL CONTROL SHALL BE MAINTAINED FROM 6:00 AM TO 9:00 AM AND 3:00 PM TO 7:00 PM ON WEEKDAYS, EXCEPT NATIONAL HOLIDAYS. FLASHING, DEACTIVATION AND ACTIVATION OF SIGNALS SHALL BE ACCOMPLISHED ONLY BY A CITY OF SANTA MONICA TRAFFIC SIGNAL TECHNICIAN. ALL ARRANGEMENTS TO DEACTIVATE SIGNALS SHALL BE MADE 24 HOURS IN ADVANCE BY CONTACTING THE CITY OF SANTA MONICA TRAFFIC SIGNAL SECTION AT (310) 458-8520 BETWEEN 6:30 AM AND 12 NOON.
4. ALL EXISTING TRAFFIC CONTROL AND STREET NAME SIGNING SHALL BE MAINTAINED OR RELOCATED TO THE NEW SIGNAL POLES WITH STANDARD SIGN BRACKETS BY THE CONTRACTOR EXCEPT WHERE A NEW SIGN IS INSTALLED. THE CONTRACTOR SHALL REPLACE ANY DAMAGED OR LOST TRAFFIC CONTROL AND STREET NAME SIGNING AT THE CONTRACTOR'S EXPENSE. THE CONTRACTOR SHALL BE RESPONSIBLE FOR PURCHASE AND INSTALLATION OF ALL "NEW" SIGNAGE. ALL STREET NAME SIGNS SHALL BE PURCHASED BY THE CONTRACTOR FROM ZUMAR INDUSTRIES (AT (800)458-8921) OR APPROVED EQUIVALENT.
5. CONTACT THE CITY TRAFFIC ENGINEER, OR HIS/HER DESIGNEE, FOR EXACT EQUIPMENT LOCATIONS PRIOR TO FINAL PLACEMENT AT (310) 458-8921.
6. THE LOCATIONS OF ALL UNDERGROUND FACILITIES ARE APPROXIMATE. THE CONTRACTOR SHALL DETERMINE EXACT LOCATIONS AND VERIFY ALL CONDITIONS ON THE JOB SITE. HAND DIG FOUNDATION UNTIL CLEAR OF OBSTRUCTIONS. TELEPHONE UNDERGROUND SERVICE ALERT AT (800) 227-2600, 48 HOURS PRIOR TO CONSTRUCTION.
7. ALL NEW SIGNAL POLE AND DETECTOR LOOP LOCATIONS ARE APPROXIMATE. THE CONTRACTOR SHALL CONTACT THE ~~CITY TRAFFIC~~ DIRECTOR OF PLANNING AND COMMUNITY DEVELOPMENT ENGINEER TO DETERMINE THE EXACT LOCATIONS, PER THE CITY'S REQUIREMENTS, AT THE TIME OF INSTALLATION. ALL STRIPING REVISIONS SHALL BE PERFORMED PRIOR TO LOOP LAYOUT. ALL CONFLICTING EXISTING DETECTOR LOOPS SHALL BE ABANDONED.

DRFI 10374

8. ALL NEW PULL BOXES SHALL BE NO.6 UNLESS OTHERWISE NOTED. ALL PULL BOXES SHALL BE CHRISTY FIBRELITE ~~FL36TBOX18~~ FL36BOX20 PULL BOXES WITH FL36D LIDS OR APPROVED EQUIVALENT. ALL PULL BOXES WITHIN COLORED CONCRETE SHALL BE COLORED TO MATCH CONCRETE AND ALIGNED TO MATCH PAVEMENT GROOVING.
9. ALL NEW TERMINAL COMPARTMENTS SHALL BE BRONZE.
10. ALL REQUESTS FOR DE-ENERGIZING SERIES STREET LIGHTING CIRCUIT SHALL BE OBTAINED THROUGH THE CIVIL ENGINEERING DIVISION OFFICE AT (310) 458-8721 ON A WORKING DAY 24 HOURS IN ADVANCE OF WORKING ON THE SYSTEM. EXISTING STREET LIGHT CIRCUITS SHALL REMAIN IN OPERATION DURING THE HOURS OF DARKNESS. IF EXISTING LIGHTING IS TO BE REMOVED, IT SHALL REMAIN IN OPERATION UNTIL NEW LIGHTING IS OPERATIONAL.
11. ALL NEW SIGNAL HEADS SHALL CONTAIN 12" DIAMETER INDICATIONS AND METAL BACKPLATES WITH "TUNNEL" VISORS. ALL INDICATIONS SHALL BE GENERAL ELECTRIC GEL CORE "INCANDESCENT LOOK" L.E.D. ALL NEW SIGNAL HEADS SHALL BE MCCAIN OR APPROVED EQUIVALENT.
12. SPLICING OF CONDUCTORS IS NOT PERMITTED. CONDUCTOR CONNECTIONS WILL ONLY BE MADE AT TERMINAL COMPARTMENTS AND CONTROLLER.
13. ALL NEW SIGNAL CONDUITS SHALL BE 3" PVC SCHEDULE 80 HDPE ENTERING PULL BOXES AT 45 DEGREES UNLESS OTHERWISE SPECIFIED. ALL NEW SIGNAL CONDUIT RUNS SHALL BE INSTALLED BY JACKING/BORING METHOD UNLESS THE STREET IS ALREADY EXCAVATED.
14. THE CONTRACTOR SHALL REMOVE THE TOP 1.5' OF ALL FOUNDATIONS AND PULL BOXES THAT ARE NOT TO BE REUSED OR SALVAGED, UNLESS IN CONFLICT WITH OTHER UTILITIES - IN WHICH CASE, CONFLICTING PORTIONS ARE TO BE REMOVED AS NECESSARY. THE CONTRACTOR SHALL RESTORE THE STREET, SIDEWALK AND/OR MEDIAN TO ORIGINAL OR BETTER CONDITION AS REQUIRED. ALL CONDUITS NOT REUSED SHALL BE ABANDONED AFTER THE CONDUCTORS ARE REMOVED.
15. THE CONTRACTOR SHALL FURNISH AND INSTALL POLARA "BULLDOG" PEDESTRIAN PUSH BUTTONS PART NUMBER: BDLM2-G, HOUSINGS, AND R10-3E SIGN PLATES, OR APPROVED EQUIVALENT.
16. ALL NEW PEDESTRIAN HEAD INDICATIONS SHALL BE GENERAL ELECTRIC GEL CORE COUNTDOWN GT1 "INCANDESCENT LOOK" L.E.D. OR APPROVED EQUIVALENT. ALL PED HEADS SHALL BE MCCAIN, OR APPROVED EQUIVALENT. PEDESTRIAN HEAD MOUNTINGS SHALL BE TYPE SP-I-CS OF STANDARD PLAN DRAWING NO. ES-3B (PER CALTRANS STANDARD PLANS DATED JULY 1992).
17. THE CONTRACTOR SHALL MAINTAIN THE OPTICOM SIGNAL PRE-EMPTION EQUIPMENT IN WORKING ORDER THROUGHOUT THE CONSTRUCTION PERIOD.
18. THE CONTRACTOR SHALL CONTACT THE AFFECTED POSTAL AND NEWSPAPER AGENCIES OF THE REMOVAL OR RELOCATION OF CONFLICTING MAILBOXES AND NEWS RACKS, WHERE APPLICABLE.
19. ALL SALVAGED MATERIAL SHALL BECOME PROPERTY OF THE CONTRACTOR.
20. ONE BUSS "TRON" SQUARE D OR APPROVED EQUAL WATERPROOF FUSE HOLDER AND 5 AMP FUSE SHALL BE INSTALLED IN THE PULLBOX AT THE BASE OF EACH POLE TO PROTECT THE LUMINAIRE.
21. CONTRACTOR SHALL TEST THE TRAFFIC SIGNAL CONTROLLER ASSEMBLY AND ALL CONNECTED EQUIPMENT PRIOR TO FINAL IMPLEMENTATION TO THE SATISFACTION OF THE ~~CITY ENGINEER~~ DIRECTOR OF PLANNING AND COMMUNITY DEVELOPMENT.

DRFI 10374

NOTE: REF. (DRFI 10431) FOR MINIMUM COVER OVER CONDUITS

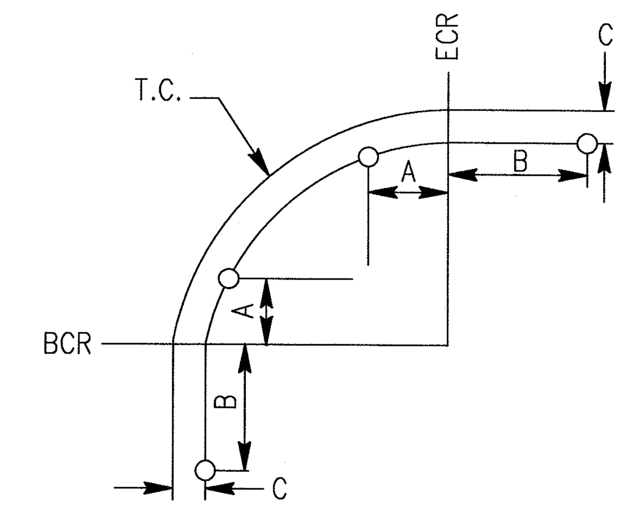

POLE LOCATION DETAIL

DETAIL A

(NO SCALE)

SRJV AUG 23 2013 ISSUED FOR CONSTRUCTION

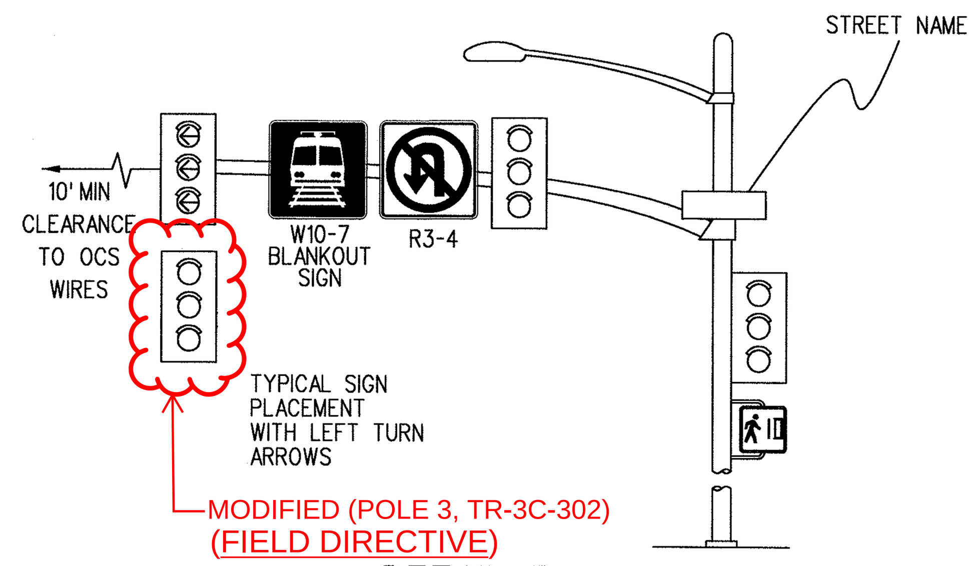

MODIFIED (POLE 3, TR-3C-302) (FIELD DIRECTIVE)

DETAIL B

(NO SCALE)

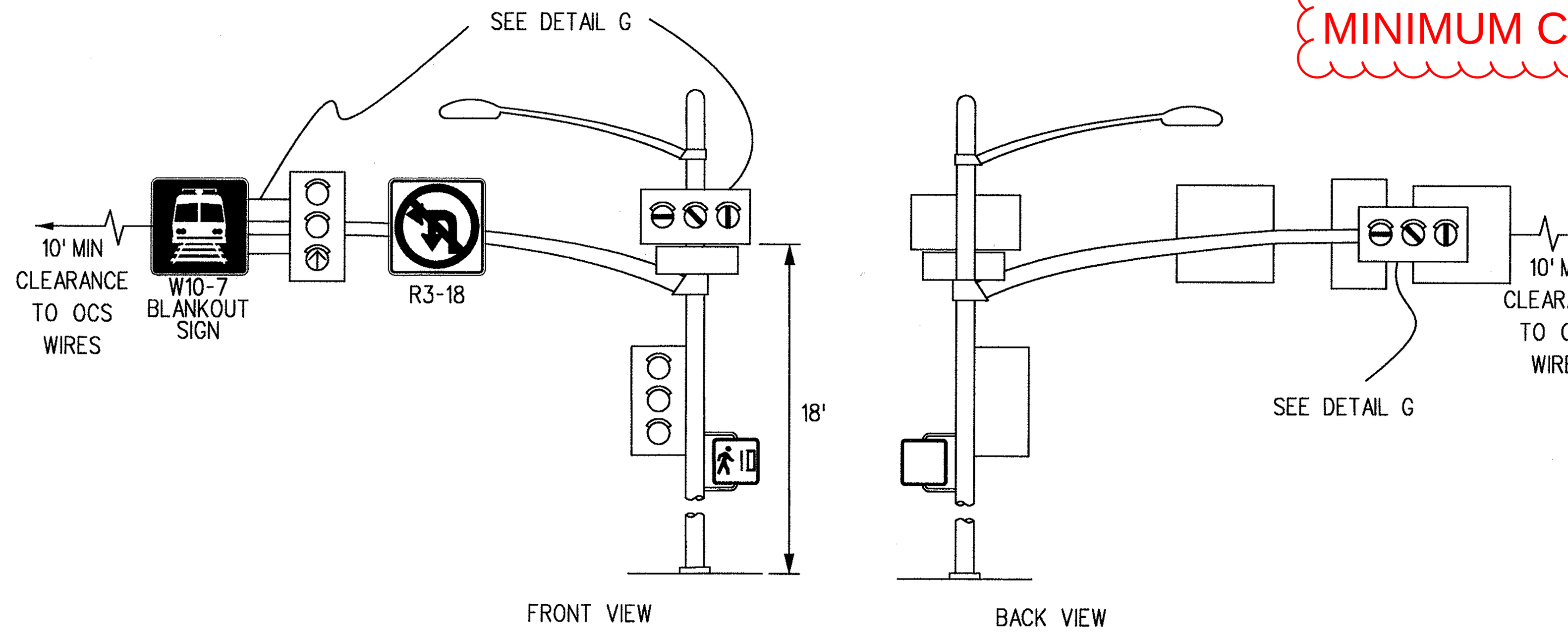

DETAIL C

(NO SCALE)

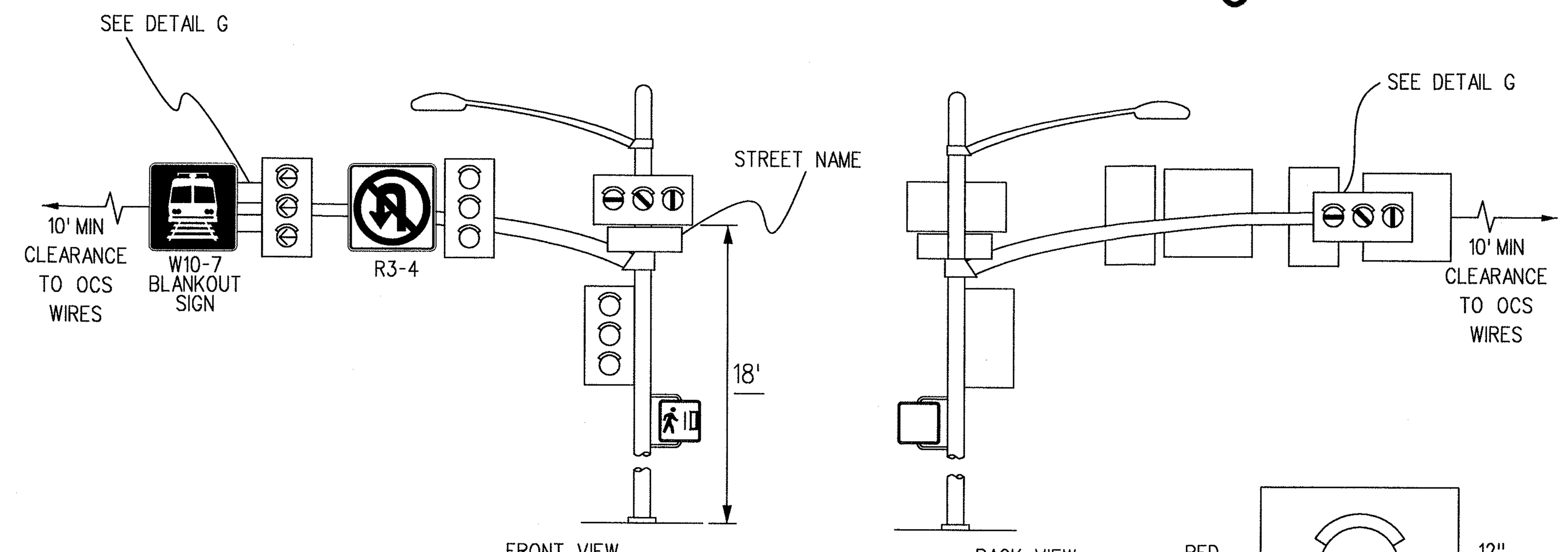

DETAIL D

(NO SCALE)

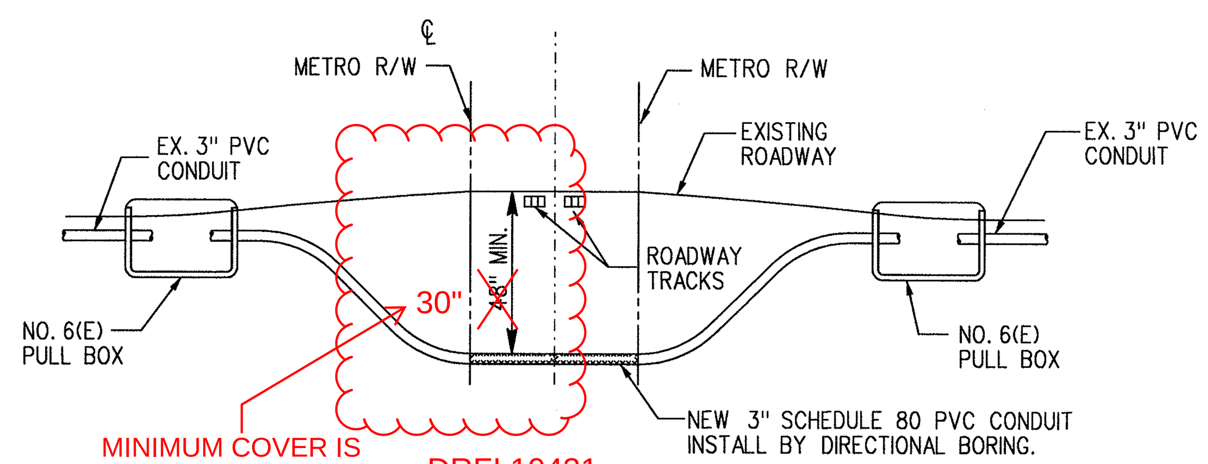

MINIMUM COVER IS 24", 30" AS PER PB'S SUGGESTION

DRFI 10431

DETAIL E CROSS SECTION

(NO SCALE)

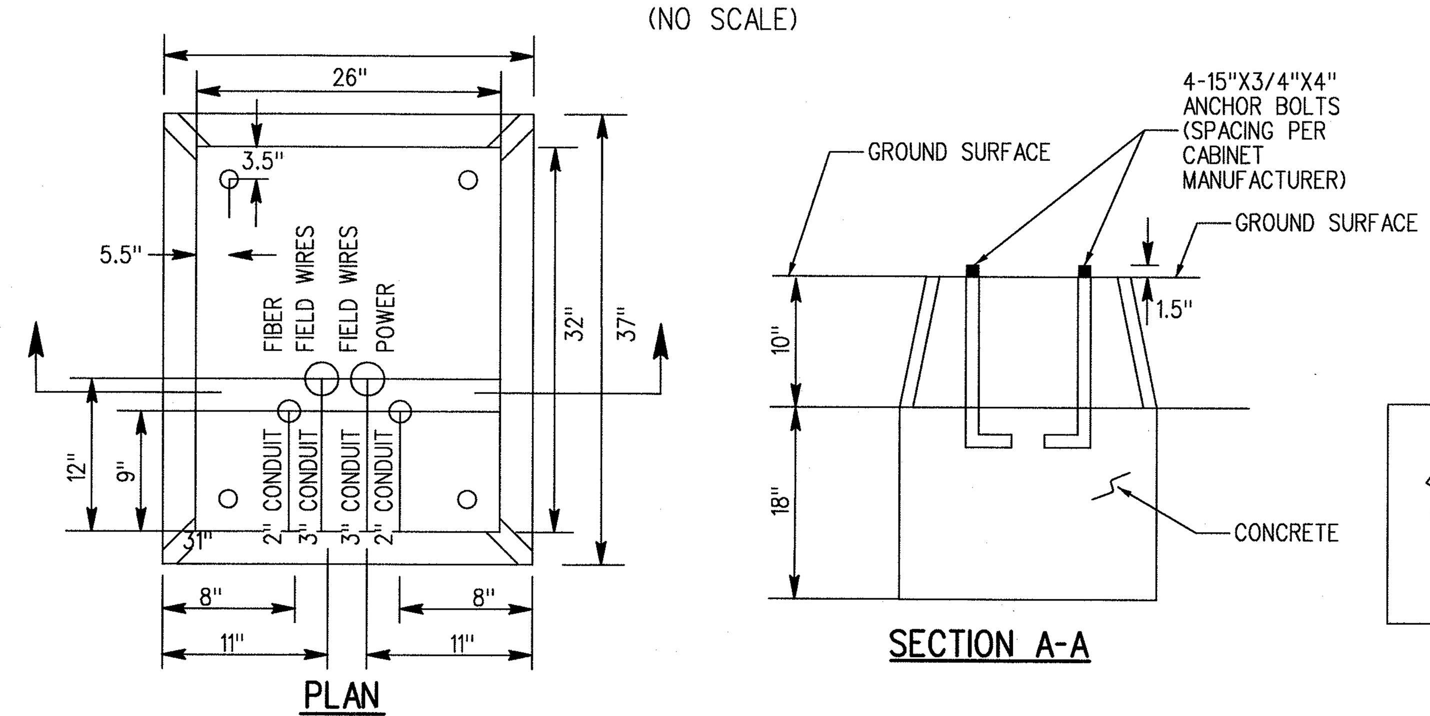

DETAIL F TRAFFIC SIGNAL CABINET FOUNDATION

(NO SCALE)

TYPE 332 CABINET FOUNDATION DETAIL

1. INSTALL ¾" CHAMFER ON THE EXPOSED CORNERS.
2. CONDUIT SHALL EXTEND ½" MIN. TO 1½" MAX. ABOVE THE FOUNDATION.

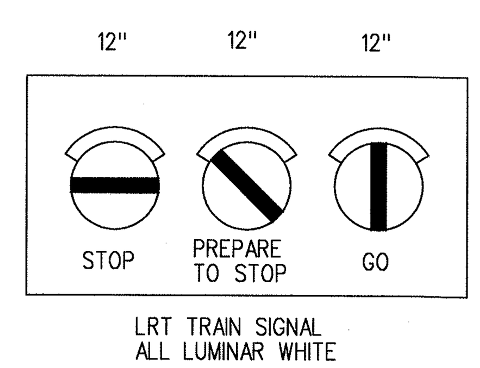

LRT TRAIN SIGNAL
ALL LUMINAR WHITE

DETAIL G

(NO SCALE)

Exposition Construction Authority Approved for Construction Drawings - AFC AUG 22 2013

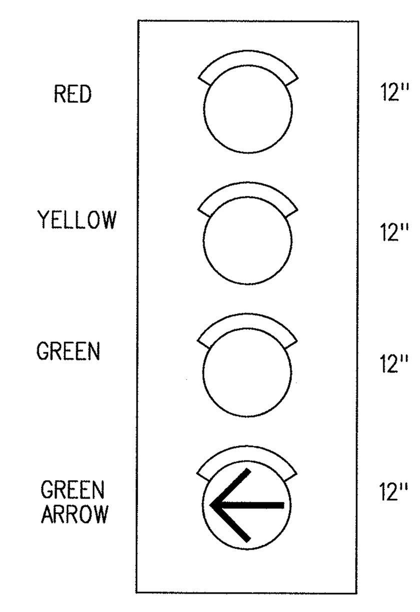

DETAIL H

(NO SCALE)

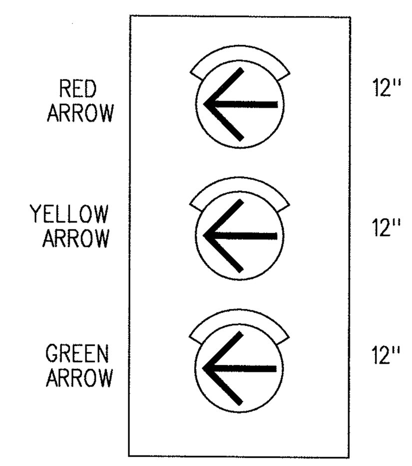

DETAIL I

(NO SCALE)

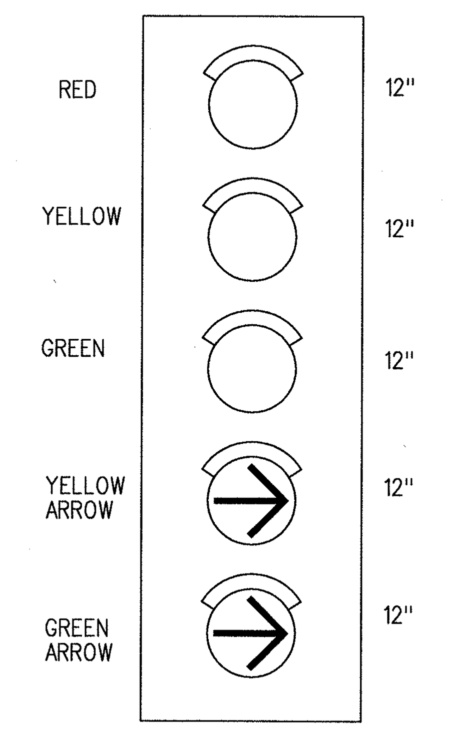

DETAIL J

(NO SCALE)

(3RFI 20078)

TRAFFIC SIGNAL CONDUIT:
HDPE PIPE SHALL BE USED FOR ALL RUNS GREATER THAN 100' (THIS IS INTENDED FOR FIBER OPTIC RUNS).
PVC SHEDULE 80 CONDUIT SHALL BE USED FOR ALL RUNS LESS THAN 100'. HOWEVER, IF THERE IS A TRAFFIC SIGNAL CONDUIT THAT HAPPENS TO BE 110' IT WILL BE OKAY TO USE PVC CONDUIT SO THAT THE ENTIRE INTERSECTION IS ALL THE SAME.

REV	DATE	BY	APP	REG NO	EXPIRES	SEAL HOLDER	DESCRIPTION
0	10/19/12	IC	JJM	C65218	09-30-13	JASON J. MELCHOR	APPROVED FOR CONSTRUCTION

DESIGNED BY: I. CONSTANTINESCU
DRAWN BY: R. CHICHIRI
CHECKED BY: J. MELCHOR
IN CHARGE: D. ADRIAN
DATE: 10/19/12

REGISTERED PROFESSIONAL ENGINEER — JASON J. MELCHOR — No. C65218 — Exp. 09-30-13 — CIVIL — STATE OF CALIFORNIA

Exposition Metro Line Construction Authority
Expo

EXPO SKANSKA RADOS
444 South Flower Street
Suite 2200
Los Angeles, CA 90071
TEL (213) 443-7463
FAX (213) 362-9481

PARSONS BRINCKERHOFF
Kimley-Horn and Associates, Inc. 660 SOUTH FIGUEROA STREET SUITE 2050 LOS ANGELES, CA 90017 TEL (213) 261-4040
CURRENT STATUS

EXPOSITION LRT PROJECT- PHASE 2
TRAFFIC SIGNAL
COLORADO AVENUE
NOTES AND DETAILS

CONTRACT NO: XP8902-002
DRAWING NO: TRN-3C-301 REV: 0
SCALE: NO SCALE
SHEET NO: 95 OF 108

SCALES — HORIZ SCALE: NO SCALE — VERT SCALE: NO SCALE
SHEET
INDEX NUMBER

City of Santa Monica
Department of Public Works
1437 4th Street, Suite 300 Santa Monica, CA 90401
TEL. (310)458-8721 FAX. (310)393-4425
e-mail : smengineering@smgov.net

CITY DRAWING NO. 9104
SHEET NO.: 95 OF 108
REFERENCE:
SUBMITTED BY: DATE: 8-19 2013
APPROVED BY: SAM MORRISSEY, P.E., CITY TRAFFIC ENGINEER — PLANNING AND COMMUNITY DEVELOPMENT
REVIEWED: DATE: 20__
REVIEWED: DATE: 20__
REVIEWED: DATE: 8-19 2013 — CITY

REVISIONS: NO. | DATE | BY | DESCRIPTION | APPROVED

justin.gatza 2:16:51 PM 10/18/2012
Plot Driver=EXP02-PDF-Full-BW.plt Pentable=EXP02-PENTABLE.tbl
K:\LDT_RDWY\094617000 - Expo Ph 2\Working\04 BATCH PLOT\Temp Export Files from PW\Traffic\expo2-trn-3c-301.plg
Plotted by: justin.gatza 10/18/2012
REVISION DATES (DESIGN STAGE ONLY)
Sheet Version 2.01

POLE SCHEDULE ●

NO.	POLE DATA TYPE	HEIGHT	SIGNAL M.A.	LUMINAIRE M.A.	LUMINAIRE LED	SIGNAL MOUNTING M.A.	VEH.	PED.	PED. PUSH BUTTON ø	QUAD	ARROW	POLE LOCATION A	B	C	R.S.N.S.	REMARKS
1	19-4-100	30'	15'	12'	267W x	MAS	SV-1-T, SV-1-T	SP-1-CS	4	E	←		20.5'	5'	5th	15' CUSTOM MAST ARM
2	15TS	30'	-	12'	267W x		SV-2-TA	SP-1-CS	6	S	→	3.5'		6'		
3	19-4-100	30'	25'	12'	267W x	2-MAS	SV-1-T	SP-1-CS	6	S	←		11.5'	5.5'	Colorado	F=12'
4	15TS	30'	-	12'	267W x		SV-1-T, SV-1-T	SP-1-CS	3	W	→		27.5'	4.5'		MOUNT LRT SIGNAL AT 17'
5	17-3-100	30'	15'	12'	267W x	MAS	SV-1-T	SP-1-CS	3	W	←	7'		3'	5th	15' CUSTOM MAST ARM MOUNT LRT SIGNAL AT 17'
6	15TS	30'		12	267W x		SV-2-TA	SP-1-CS	2	S	←	23.5'		3'		
7	19-4-100	30'	30'	12	267W x	2-MAS	SV-1-T	SP-1-CS	2	N	←		SEE PLAN	7.5'	Colorado	F=12'
8	1-D	7'	-	-			-	TP-1-T	4	E	→	SEE PLAN				

● ALL EQUIPMENT IS NEW UNLESS OTHERWISE SPECIFIED

x CREE LEDWAY STREET LIGHT, 120 LEDS, 700 MA, 4000K

EXISTING PHASE DIAGRAM

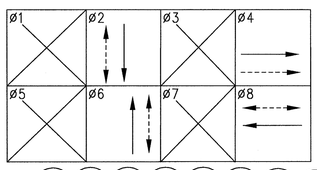

PROPOSED PHASE DIAGRAM

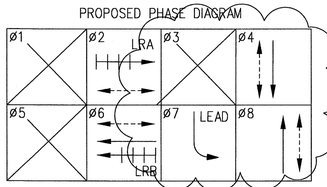

NOTE: THIS PLAN ACCURATE FOR TRAFFIC SIGNAL WORK ONLY

(3RFI 20078)
TRAFFIC SIGNAL CONDUIT:
HDPE PIPE SHALL BE USED FOR ALL RUNS GREATER THAN 100' (THIS IS INTENDED FOR FIBER OPTIC RUNS). PVC SHEDULE 80 CONDUIT SHALL BE USED FOR ALL RUNS LESS THAN 100'. HOWEVER, IF THERE IS A TRAFFIC SIGNAL CONDUIT THAT HAPPENS TO BE 110' IT WILL BE OKAY TO USE PVC CONDUIT SO THAT THE ENTIRE INTERSECTION IS ALL THE SAME.

DRFI 10717

CONDUCTOR SCHEDULE ●

AWG SIZE OR CABLE TYPE	POLE OR CIRCUIT	1	2	3	4	5*	6	7	8	9
3 CONDUCTOR	POLE - 1	1	1	1	1	1	1		1	1
	2		1	1	1	1	1		1	1
	3				1	1	1		1	1
	4					1	1		1	1
	5						1		1	1
	6							1	1	1
	7							1	1	1
12 CONDUCTOR	8	1	1	1	1	1	1	1	1	1
TOTAL CABLES-3 CONDUCTOR/12 CONDUCTOR		1/1	2/2	3/3	4/4	5/5	6/6	1/1	7/7	8/8
*6 SIGNAL SERVICE		2	2	2	2	2	2		2	
*8 LUMINAIRE		2	4	4	4	4	4	2	4	
*8 BLANKOUT SIGNS			1	1	2	2	2	1	3	3
VIDEO DETECTION CABLES			1	1	2	2	2	1	3	3
CCTV HYBRID CABLE							1		1	1
12 SMFO INTERCONNECT CABLE							1**	1**	1**	1**
CHECK IN/CHECK OUT LOOP DLC		6	6	6	6	6	17		17	17
*8 COUNTDOWN TIMERS		8	8	8	8	8	8	-	8	8
CONDUIT SIZE		1-2" 1-1" 1-3"	4"	1-2" 2-3" 1-4"	2-4"	2-4"	3-4"	3"	3-4"	2-3" 2-3"
CONDUIT FILL %		17	25	25	18	20	20	15	24	41

● ALL CONDUCTORS ARE NEW UNLESS OTHERWISE SPECIFIED
* SCHEDULE 80 PVC CONDUIT PER DETAIL "E" ON DWG TRN-3C-301
** PER FIBER OPTIC COMMUNICATION DESIGN ON DWG NA-3C-301

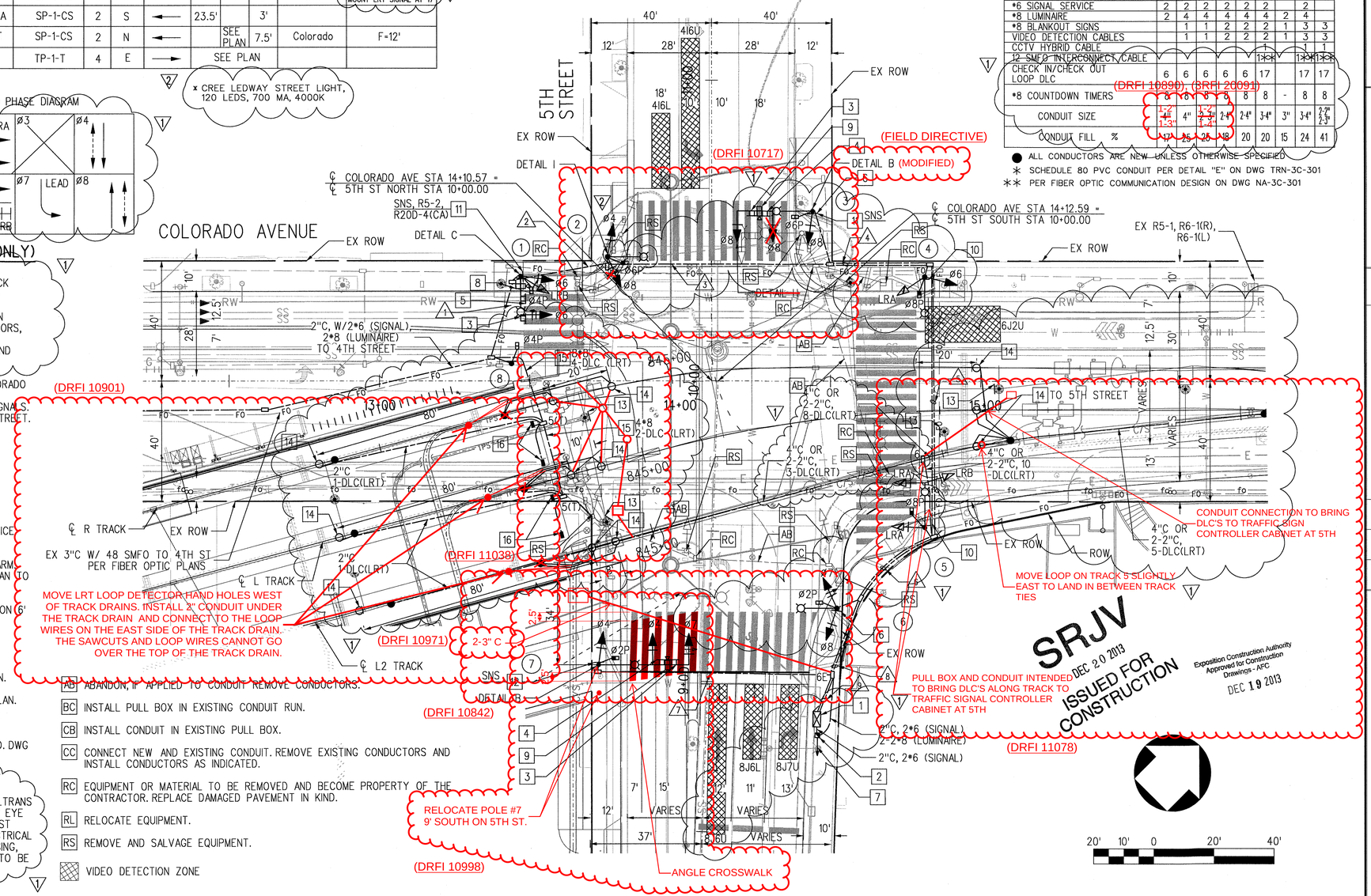

TRAFFIC SIGNAL CONSTRUCTION NOTES (THIS SHEET ONLY)

1. FURNISH AND INSTALL TYPE 332 TRAFFIC SIGNAL CONTROLLER CABINET COMPLETE WITH FOUNDATION. FURNISH AND INSTALL BATTERY BACK-UP, RACK MOUNTED 2070 CONTROLLER WITH 2033 MCCAIN SOFTWARE OR APPROVED EQUAL, 16 CHANNEL CMU, AND ALL OTHER APPURTENANCES IN THE CABINET NECESSARY TO PROVIDE THE INTENDED OPERATIONS. FOR VIDEO DETECTION FURNISH AND INSTALL 3 ITERIS VANTAGE EDGE2 SINGLE CHANNEL PROCESSORS, 2 ITERIS VANTAGE EXTENSION MODULES, 1 ITERIS EDGECONNECT CARD, LCD MONITOR DRAWER WITH 15" COLOR SCREEN, 8 POSITION DETECTOR RACK AND NEW PHASE SELECTOR CARD. SEE DETAIL F FOR FOUNDATION DETAIL.
2. INSTALL RELOCATED TYPE III-CF SERVICE CABINET, FROM SOUTH SIDE COLORADO BETWEEN 4TH AND 5TH, PER CALTRANS STANDARD PLAN ES-2F, WITH TWO 100-AMP METERS SERVING THE 4TH STREET AND 5TH STREET TRAFFIC SIGNALS. FURNISH AND INSTALL 30 AMP BREAKER FOR BLANK OUT SIGNS AT 5TH STREET.
3. FURNISH AND INSTALL W10-7 BLANKOUT SIGN ON TRAFFIC SIGNAL POLE.
4. FURNISH AND INSTALL R3-4 SIGN ON TRAFFIC SIGNAL POLE.
5. FURNISH AND INSTALL R3-18 SIGN ON TRAFFIC SIGNAL POLE.
6. FURNISH AND INSTALL R13A(CA) SIGN ON TRAFFIC SIGNAL POLE.
7. FURNISH AND INSTALL 3"C WITH PULL ROPE PER SCE REQUIREMENTS. SERVICE POINT CONNECTION PENDING SCE COORDINATION.
8. FURNISH AND INSTALL ITERIS RZ-4C COLOR ZOOM CAMERA ON LUMINAIRE ARM. THE CONTRACTOR SHALL ARRANGE FOR AN ITERIS FIELD SERVICE TECHNICIAN TO BE ON THE SITE TO ASSIST WITH THE INITIAL SETUP.
9. FURNISH AND INSTALL ITERIS RZ-4C COLOR ZOOM CAMERA ON MAST ARM ON 6' RISER. THE CONTRACTOR SHALL ARRANGE FOR AN ITERIS FIELD SERVICE TECHNICIAN TO BE ON THE SITE TO ASSIST WITH THE INITIAL SETUP.
10. FURNISH AND INSTALL W82-1 SIGN ON TRAFFIC SIGNAL POLE.
11. FURNISH AND INSTALL SIGN ON TRAFFIC SIGNAL POLE, SIGN TYPE PER PLAN.
12. REMOVE AND RELOCATE SIGN ON TRAFFIC SIGNAL POLE, SIGN TYPE PER PLAN.
13. FURNISH AND INSTALL R15-6 AND R15-6A SIGNS ON OCS POLES.
14. INSTALL CHECK-IN AND CHECK-OUT LRT DETECTOR LOOPS PER LADOT STD. DWG S-70-4A.
15. INSTALL 2"C, 2*8 FOR COUNTDOWN TIMERS AND DLC'S AS NOTED.
16. COUNTDOWN TIMER TO BE MOUNTED ON ARCHWAY COLUMN USING SP-1 CALTRANS MOUNTING AT 7' HEIGHT ABOVE TOP OF RAIL TO BE AT TRAIN CONDUCTOR EYE LEVEL. COUNTDOWN TIMER TO BE ABLE TO SWIVEL SIDE-TO-SIDE TO ADJUST ANGLE. LINE OF SIGHT MUST BE CLEAR TO CONDUCTOR. SEE STATION ELECTRICAL SHEET E-S7-115 AND E-S7-116. COUNTDOWN TIMER TO BE McCAIN 12" HOUSING, ALUMINUM, AND BLACK WITH WATERPROOF SWITCH. COUNTDOWN INDICATION TO BE LED. SEE COUNTDOWN TIMER DETAIL ON SHEET TR-3B-304.

AB ABANDON, IF APPLIED TO CONDUIT REMOVE CONDUCTORS.
BC INSTALL PULL BOX IN EXISTING CONDUIT RUN.
CB INSTALL CONDUIT IN EXISTING PULL BOX.
CC CONNECT NEW AND EXISTING CONDUIT. REMOVE EXISTING CONDUCTORS AND INSTALL CONDUCTORS AS INDICATED.
RC EQUIPMENT OR MATERIAL TO BE REMOVED AND BECOME PROPERTY OF THE CONTRACTOR. REPLACE DAMAGED PAVEMENT IN KIND.
RL RELOCATE EQUIPMENT.
RS REMOVE AND SALVAGE EQUIPMENT.
VIDEO DETECTION ZONE

REV	DATE	BY	APP	REG NO	EXPIRES	SEAL HOLDER	DESCRIPTION
2	12/17/13	MS	JJM	C65218	09-30-15	JASON J. MELCHOR	ECI57
1	12/17/13	MS	JJM	C65218	09-30-15	JASON J. MELCHOR	ECI51
0	10/19/12	IC	JJM	C65218	09-30-13	JASON J. MELCHOR	APPROVED FOR CONSTRUCTION

REVISION DATES (DESIGN STAGE ONLY)

DESIGNED BY I. CONSTANTINESCU
DRAWN BY R. CHICHIRI
CHECKED BY J. MELCHOR
IN CHARGE D. ADRIAN
DATE 10/19/12

REGISTERED PROFESSIONAL ENGINEER JASON J. MELCHOR No. C65218 Exp. 09-30-15 CIVIL STATE OF CALIFORNIA

Exposition Metro Line Construction Authority
Expo
444 South Flower Street
Suite 2200
Los Angeles, CA 90071
TEL (213) 443-7463
FAX (213) 362-9481
EXPO SKANSKA RADOS

PARSONS BRINCKERHOFF
Kimley-Horn and Associates, Inc.
CONCRETE US

EXPOSITION LRT PROJECT- PHASE 2
TRAFFIC SIGNAL
COLORADO AVENUE AT 5TH STREET
PLAN

CONTRACT NO XP8902-002
DRAWING NO TR-3C-302
REV 2
SCALE 1"=20'
SHEET NO 97 OF 108

jason.melchor 7:34:15 PM 12/17/2013
Plot Driver=EXPO2-PDF-Full-BW.plt
Pentable=EXPO2-PENTABLE.tbl
c:\projectwise\pb\projectwiseint\jason.melchor\dms09100\expo2-tr-3c-302.plg

SCALES: HORIZ SCALE: 1"=20' VERT SCALE: NO SCALE
SHEET
INDEX NUMBER

Sheet Version 2.01

CITY DRAWING NO. 9104
SHEET NO. 97 OF 108
DATE 12/18/2013
APPROVED BY: SAM MORRISSEY, P.E., CITY TRAFFIC ENGINEER, PLANNING AND COMMUNITY DEVELOPMENT

REFERENCE
SUBMITTED BY
REVIEWED DATE 20
REVIEWED DATE 20
REVIEWED DATE 20
APPROVED CITY

NO. DATE BY DESCRIPTION REVISIONS

City of Santa Monica
Department of Public Works
1437 4th Street, Suite 300 Santa Monica, CA 90401
TEL. (310)458-8721 FAX. (310)393-4425
e-mail : smengineering@smgov.net

Plotted by: jason.melchor 12/17/2013 c:\projectwise\pb\projectwiseint\jason.melchor\dms09100\expo2-tr-3c-302.plg

TRAFFIC SIGNAL CONSTRUCTION NOTES (THIS SHEET ONLY)

1. EXISTING TYPE 332 TRAFFIC SIGNAL CONTROLLER CABINET WITH 2070 CONTROLLER TO BE PROTECTED IN PLACE. FOR VIDEO DETECTION FURNISH AND INSTALL 4 ITERIS VANTAGE EDGE2 SINGLE CHANNEL PROCESSORS, 2 ITERIS VANTAGE EXTENSION MODULES, 1 ITERIS EDGECONNECT CARD, LCD MONITOR DRAWER WITH 15" COLOR SCREEN, 8 POSITION DETECTOR RACK AND NEW PHASE SELECTOR CARD. (1)
2. FURNISH AND INSTALL R15-6 AND R15-6A SIGNS ON OCS POLES.
3. FURNISH AND INSTALL W10-7 BLANKOUT SIGN ON TRAFFIC SIGNAL POLE.
4. FURNISH AND INSTALL R3-4 SIGN ON TRAFFIC SIGNAL POLE.
5. FURNISH AND INSTALL R3-18 SIGN ON TRAFFIC SIGNAL POLE.
6. INSTALL CHECK-IN CHECK-OUT LRT DETECTOR LOOPS PER LADOT STD. DWG S-70-4A.
7. NOT USED.
8. FURNISH AND INSTALL ITERIS RZ-4C COLOR ZOOM CAMERA ON LUMINAIRE ARM. THE CONTRACTOR SHALL ARRANGE FOR AN ITERIS FIELD SERVICE TECHNICIAN TO BE ON THE SITE TO ASSIST WITH THE INITIAL SETUP.
9. FURNISH AND INSTALL ITERIS RZ-4C COLOR ZOOM CAMERA ON SIGNAL MAST ARM ON 6' RISER. THE CONTRACTOR SHALL ARRANGE FOR AN ITERIS FIELD SERVICE TECHNICIAN TO BE ON THE SITE TO ASSIST WITH THE INITIAL SETUP.
10. FURNISH AND INSTALL W82-1 SIGN ON TRAFFIC SIGNAL POLE.
11. FURNISH AND INSTALL SIGN ON TRAFFIC SIGNAL POLE, SIGN TYPE PER PLAN.
12. INSTALL LRT DETECTOR LOOPS PER LADOT STD. DWG S-70-4A. CONNECT 1-DLC PER LOOP TO CONTROLLER CABINET AS NOTED. (1)

AB ABANDON, IF APPLIED TO CONDUIT REMOVE CONDUCTORS.

BC INSTALL PULL BOX IN EXISTING CONDUIT RUN.

CB INSTALL CONDUIT IN EXISTING PULL BOX.

CC CONNECT NEW AND EXISTING CONDUIT. REMOVE EXISTING CONDUCTORS AND INSTALL CONDUCTORS AS INDICATED.

RC EQUIPMENT OR MATERIAL TO BE REMOVED AND BECOME PROPERTY OF THE CONTRACTOR. REPLACE DAMAGED PAVEMENT IN KIND.

RL RELOCATE EQUIPMENT.

RS REMOVE AND SALVAGE EQUIPMENT.

VIDEO DETECTION ZONE

TRAFFIC SIGNAL CONDUIT:
HDPE PIPE SHALL BE USED FOR ALL RUNS GREATER THAN 100' (THIS IS INTENDED FOR FIBER OPTIC RUNS). PVC SHEDULE 80 CONDUIT SHALL BE USED FOR ALL RUNS LESS THAN 100'. HOWEVER, IF THERE IS A TRAFFIC SIGNAL CONDUIT THAT HAPPENS TO BE 110' IT WILL BE OKAY TO USE PVC CONDUIT SO THAT THE ENTIRE INTERSECTION IS ALL THE SAME.
(3RFI 20078)

POLE SCHEDULE ●

POLE DATA NO.	TYPE	HEIGHT	SIGNAL M.A.	LUMINAIRE M.A.	LUMINAIRE LED	(2) SIGNAL MOUNTING M.A.	VEH.	PED.	PED. PUSH BUTTON Ø	QUAD	ARROW	POLE LOCATION A	B	C	R.S.N.S.	REMARKS
1	19-4-100	30'	15'	12'	267W x	2-MAS	SV-1-T, SV-1-T'	SP-1-CS	4	E	←	2.5'	(1)	2.5'	6th	15' CUSTOM MAST ARM
2	1-A(E)	10'	-	-			TV-2-T	SP-1-T(E)	6(E)	S	→	EXISTING				
3	24-4-100	30'	35'	12'	267W x	2-MAS	SV-1-T	SP-1-CS	6	S	←	(1)	5'	3'	Colorado	F=16'
4	1-D	10'	-	-			TV-2-T	SP-1-CS	8	W	→		0'	3'		
5	19-4-100	30'	20'	12'	267W x	2-MAS	SV-1-T, SV-1-T'	SP-1-CS	8	W	←	22'		7'	6th	20' CUSTOM MAST ARM
6	1-D	10'	-	-			TV-2-T	SP-1-CS	2	N	→		2.5'	4'		
7	24-4-100	30'	35'	12'	267W x	2-MAS	SV-1-T	SP-1-CS	2	N	←		2'	4.5'	Colorado	F=16'
8	1-D	10'	-	-			TV-2-T	SP-1-CS	4	E	→	8.5'		3'		

● ALL EQUIPMENT IS NEW UNLESS OTHERWISE SPECIFIED (E) EXISTING (1)

x CREE LEDWAY STREET LIGHT, 120 LEDS, 700 MA, 4000K (2)

EXISTING PHASE DIAGRAM

PROPOSED PHASE DIAGRAM

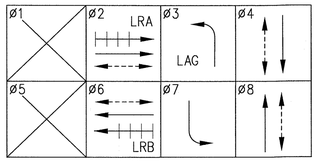

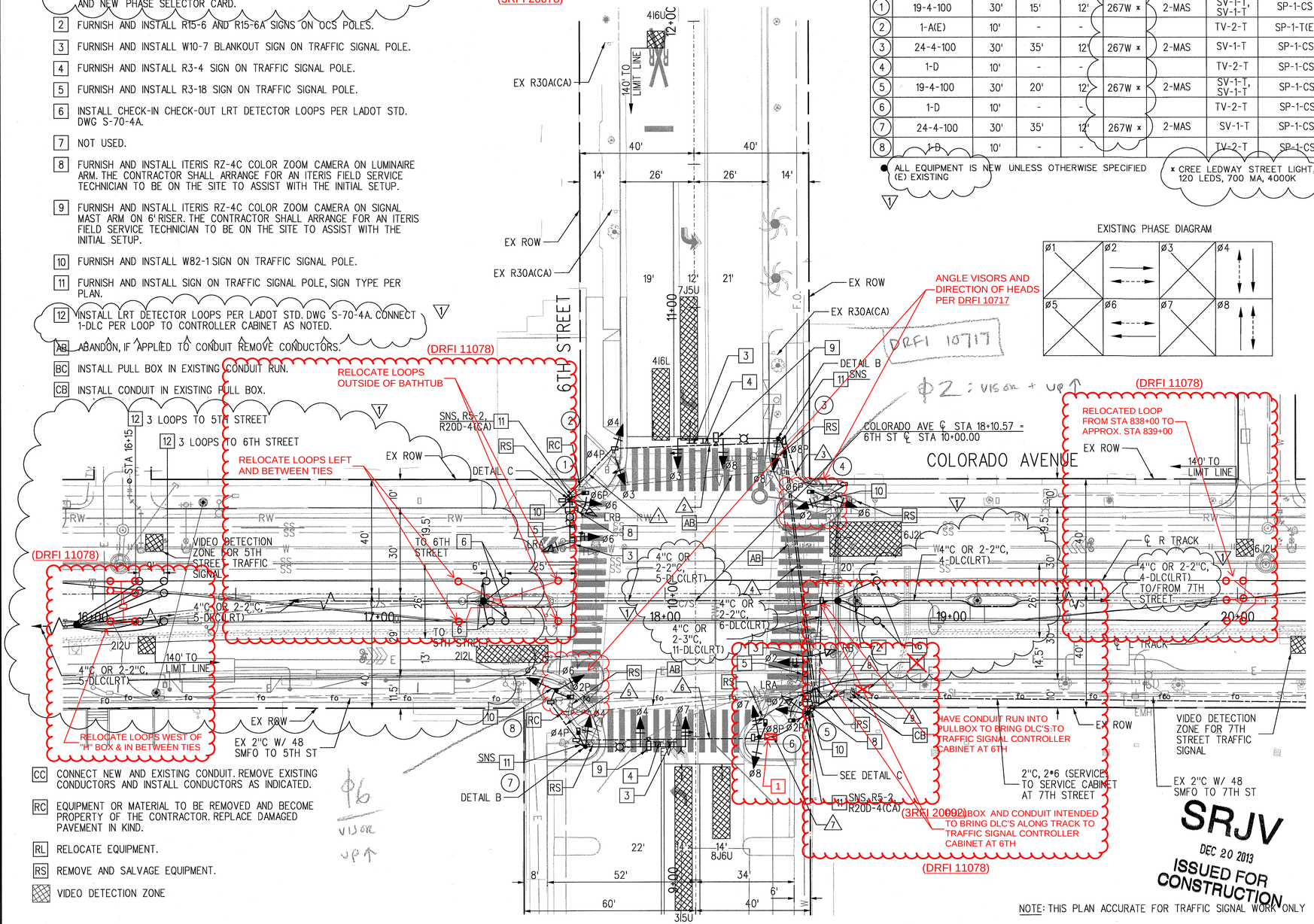

CONDUCTOR SCHEDULE ●

AWG SIZE OR CABLE TYPE	POLE OR CIRCUIT	1	2	3	4	5	6	7	8	9
3 CONDUCTOR	POLE - (1)	1	1	1		1	1		1	1
	(2)	1	1	1		1	1		1	1
	(3)				1	1	1		1	1
	(4)				1	1	1		1	1
	(5)							1	1	1
	(6)							1	1	1
	(7)							1	1	1
	(8)							1	1	1
TOTAL CABLES-3 CONDUCTOR/12 CONDUCTOR		1	1/2	2/1	1/4	4/1	1/2	2/3	3/8	8/8
•6 SIGNAL SERVICE										2
•8 LUMINAIRE		2	2		2		2	2	2	2
•8 BLANKOUT SIGNS		1	1		2		1	1	1	1
VIDEO DETECTION CABLE		1	1		2		1	1	4	4
CCTV HYBRID CABLES										
12 SMFO INTERCONNECT CABLE						1	1	1	1	
CHECK IN/CHECK OUT, TSP LOOP DLC								11	11	
CONDUIT SIZE		3"	3"	3"	2-3"	3"	3"	4"	3-4"	2-3"C 1-2"C
(1) CONDUIT FILL %		15	22	7	21	7	25	20	21	47

● ALL CONDUCTORS ARE NEW UNLESS OTHERWISE SPECIFIED (E) EXISTING

* SCHEDULE 80 PVC CONDUIT PER DETAIL "E" ON DWG TRN-3C-301

** PER FIBER OPTIC COMMUNICATION DESIGN ON DWG NA-3C-301

Exposition Construction Authority Approved for Construction Drawings - AFC DEC 19 2013

SRJV DEC 20 2013 ISSUED FOR CONSTRUCTION

NOTE: THIS PLAN ACCURATE FOR TRAFFIC SIGNAL WORK ONLY

REV	DATE	BY	APP	REG NO	EXPIRES	SEAL HOLDER	DESCRIPTION
2	12/17/13	MS	JJM	C65218	09-30-15	JASON J. MELCHOR	ECI57
1	12/17/13	MS	JJM	C65218	09-30-15	JASON J. MELCHOR	ECI51
0	10/19/12	IC	JJM	C65218	09-30-13	JASON J. MELCHOR	APPROVED FOR CONSTRUCTION

REVISION DATES (DESIGN STAGE ONLY)

DESIGNED BY I. CONSTANTINESCU
DRAWN BY R. CHICHIRI
CHECKED BY J. MELCHOR
IN CHARGE D. ADRIAN
DATE 10/19/12

REGISTERED PROFESSIONAL ENGINEER JASON J. MELCHOR No. C65218 Exp. 09-30-15 CIVIL STATE OF CALIFORNIA

Exposition Metro Line Construction Authority
Expo
EXPO SKANSKA RADOS
444 South Flower Street, Suite 2200, Los Angeles, CA 90071, TEL (213) 443-7463, FAX (213) 362-9481

PARSONS BRINCKERHOFF
Kimley-Horn and Associates, Inc. 660 SOUTH FIGUEROA STREET SUITE 2400 LOS ANGELES, CA 90017 TEL: (213) 281-4040

EXPOSITION LRT PROJECT- PHASE 2
TRAFFIC SIGNAL
COLORADO AVENUE AT 6TH STREET
PLAN

CONTRACT NO XP8902-002
DRAWING NO TR-3C-303 REV 2
SCALE 1"=20'
SHEET NO 98 OF 108

SCALES: HORIZ SCALE: 1"=20' VERT SCALE: NO SCALE
SHEET
INDEX NUMBER

mingfang.song 4:20:10 PM 12/17/2013
Plot Driver=EXPO2-PDF-Full-BW.plt
Pentable=EXPO2-PENTABLE.tbl
c:\projectwise\pb\projectwiseint\mingfang.song\dms09100\expo2-tr-3c-303.plg

Sheet Version 2.01

CITY DRAWING NO. 9104
SHEET NO. 98 OF 108
DATE: 12/19/2013
APPROVED BY: SAM MORRISSEY, P.E. CITY TRAFFIC ENGINEER, PLANNING AND COMMUNITY DEVELOPMENT
REFERENCE:
SUBMITTED BY:
REVIEWED: DATE: 20
REVIEWED: DATE: 20
REVIEWED: DATE: 20

REVISIONS: NO. DATE BY DESCRIPTION APPROVED

City of Santa Monica
Department of Public Works
1437 4th Street, Suite 300 Santa Monica, CA 90401
TEL. (310)458-8721 FAX. (310)393-4425
e-mail : smengineering@smgov.net

Plotted by: mingfang.song 12/17/2013 c:\projectwise\pb\projectwiseint\mingfang.song\dms09100\expo2-tr-3c-303.plg

POLE SCHEDULE ●

POLE DATA NO.	TYPE	HEIGHT	SIGNAL M.A.	LUMINAIRE M.A.	LUMINAIRE LED	SIGNAL MOUNTING M.A.	VEH.	PED.	PED. PUSH BUTTON Ø	QUAD	ARROW	POLE LOCATION A	B	C	R.S.N.S.	REMARKS
1	19-4-100	30'	15'	12'	267W x	2-MAS	SV-1-T, SV-1-T'	SP-1-CS	4	E	←		10.5'	4'	7th	15' CUSTOM MAST ARM
2	1-D	10'	-	-			TV-2-T	SP-1-CS	6	S	→	1'		6.5'		
3	19-4-100	30'	30'	12'	267W x	2-MAS	SV-1-T	SP-1-CS	6	S	←	2.0		6.5'	Colorado	F=12'
4	1-A(E)	10'	-	-			TV-2-T	SP-1-T(E)	8(E)	W	→	EXISTING				
5	19-4-100	30'	15'	12'	267W x	2-MAS	SV-1-T, SV-1-T'	SP-1-CS	8	W	←	6'		2'	7th	15' CUSTOM MAST ARM
6	1-D	10'	-	-			TV-2-T	SP-1-CS	2	N	→	1'		4.5'		
7	19-4-100	30'	30'	12'	267W x	2-MAS	SV-1-T	SP-1-CS	2	N	←	5'		5'	Colorado	F=14'
8	1-D	10'	-	-			TV-2-T	SP-1-CS	4	E	→	5'		8'		

● ALL EQUIPMENT IS NEW UNLESS OTHERWISE SPECIFIED
(E) EXISTING

x CREE LEDWAY STREET LIGHT, 120 LEDS, 700 MA, 4000K

TRAFFIC SIGNAL CONDUIT:
HDPE PIPE SHALL BE USED FOR ALL RUNS GREATER THAN 100' (THIS IS INTENDED FOR FIBER OPTIC RUNS). PVC SHEDULE 80 CONDUIT SHALL BE USED FOR ALL RUNS LESS THAN 100'. HOWEVER, IF THERE IS A TRAFFIC SIGNAL CONDUIT THAT HAPPENS TO BE 110' IT WILL BE OKAY TO USE PVC CONDUIT SO THAT THE ENTIRE INTERSECTION IS ALL THE SAME.
(3RFI 20078)

NOTE: THIS PLAN ACCURATE FOR TRAFFIC SIGNAL WORK ONLY

EXISTING PHASE DIAGRAM

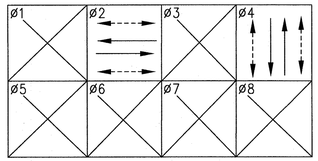

PROPOSED PHASE DIAGRAM

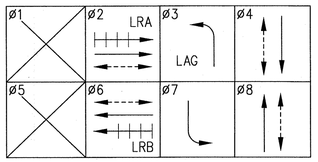

TRAFFIC SIGNAL CONSTRUCTION NOTES (THIS SHEET ONLY)

1. EXISTING TYPE 332 TRAFFIC SIGNAL CONTROLLER CABINET WITH 2070 CONTROLLER TO BE PROTECTED IN PLACE. FOR VIDEO DETECTION FURNISH AND INSTALL 4 ITERIS VANTAGE EDGE2 SINGLE CHANNEL PROCESSORS, 2 ITERIS VANTAGE EXTENSION MODULES, 1 ITERIS EDGECONNECT CARD, LCD MONITOR DRAWER WITH 15" COLOR SCREEN, 8 POSITION DETECTOR RACK AND NEW PHASE SELECTOR CARD.
2. EXISTING TYPE III-CF ELECTRICAL SERVICE CABINET WITH TWO 100-AMP METERS (FOR 6TH STREET AND 7TH STREET TRAFFIC SIGNALS). INSTALL TWO NEW 50 AMP BREAKER (BLANKOUT SIGNS), ONE FOR 6TH STREET AND ONE FOR 7TH STREET.
3. FURNISH AND INSTALL W10-7 BLANKOUT SIGN ON TRAFFIC SIGNAL POLE.
4. FURNISH AND INSTALL R3-4 SIGN ON TRAFFIC SIGNAL POLE.
5. FURNISH AND INSTALL R3-18 SIGN ON TRAFFIC SIGNAL POLE.
6. INSTALL CHECK-IN AND CHECK-OUT LRT DETECTOR LOOPS PER LADOT STD. DWG. S-70-4A.
7. INSTALL LRT DETECTOR LOOPS PER LADOT STD. DWG S-70-4A. CONNECT 1-DLC PER LOOP TO CONTROLLER CABINET TO STREET AS NOTED.
8. FURNISH AND INSTALL ITERIS RZ-4C COLOR ZOOM CAMERA ON LUMINAIRE ARM. THE CONTRACTOR SHALL ARRANGE FOR AN ITERIS FIELD SERVICE TECHNICIAN TO BE ON THE SITE TO ASSIST WITH THE INITIAL SETUP.
9. FURNISH AND INSTALL ITERIS RZ-4C COLOR ZOOM CAMERA ON SIGNAL MAST ARM ON 6' RISER. THE CONTRACTOR SHALL ARRANGE FOR AN ITERIS FIELD SERVICE TECHNICIAN TO BE ON THE SITE TO ASSIST WITH THE INITIAL SETUP.
10. FURNISH AND INSTALL W82-1 SIGN ON TRAFFIC SIGNAL POLE.
11. FURNISH AND INSTALL SIGN ON TRAFFIC SIGNAL POLE, SIGN TYPE PER PLAN.

AB ABANDON, IF APPLIED TO CONDUIT REMOVE CONDUCTORS.
BC INSTALL PULL BOX IN EXISTING CONDUIT RUN.
CB INSTALL CONDUIT IN EXISTING PULL BOX.
CC CONNECT NEW AND EXISTING CONDUIT. REMOVE EXISTING CONDUCTORS AND INSTALL CONDUCTORS AS INDICATED.
RC EQUIPMENT OR MATERIAL TO BE REMOVED AND BECOME PROPERTY OF THE CONTRACTOR. REPLACE DAMAGED PAVEMENT IN KIND.
RL RELOCATE EQUIPMENT.
RS REMOVE AND SALVAGE EQUIPMENT.
VIDEO DETECTION ZONE

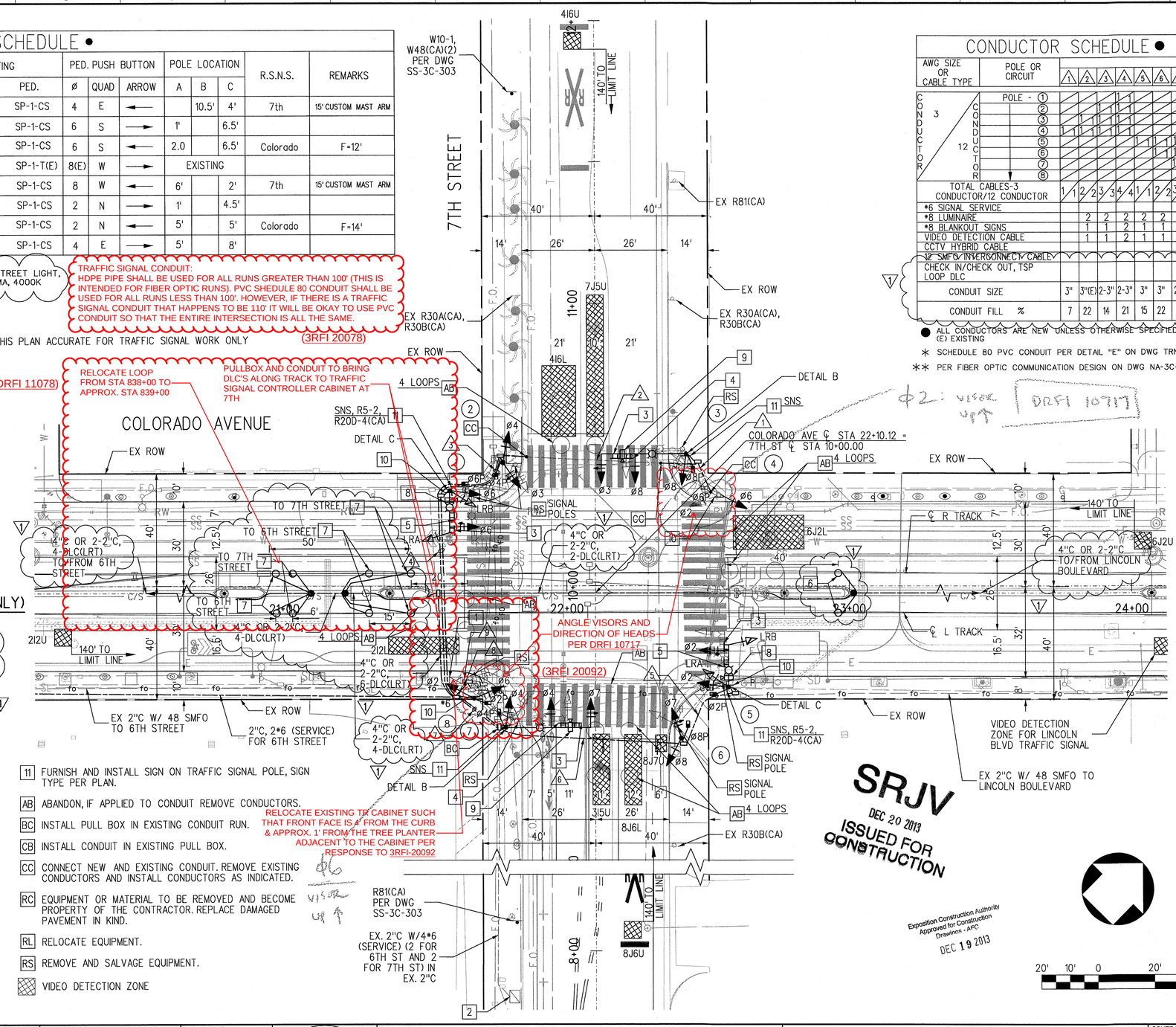

CONDUCTOR SCHEDULE ●

AWG SIZE OR CABLE TYPE	POLE OR CIRCUIT	1	2	3	4	5	6	7	8	9
3 CONDUCTOR	POLE - 1									
	2									
	3									
	4									
12 CONDUCTOR	5									
	6									
	7									
	8									
TOTAL CABLES-3 CONDUCTOR/12 CONDUCTOR		1	2	3	4	1	2	3	8	8
*6 SIGNAL SERVICE								4	2	2
*8 LUMINAIRE		2	2	2	2	2	2	2	4	4
*8 BLANKOUT SIGNS		1	1	2	1	1	2	4	4	
VIDEO DETECTION CABLE		1	1	2	1	1	2	4	4	
CCTV HYBRID CABLE							1	1	1	
12 SMFO INTERCONNECT CABLE										
CHECK IN/CHECK OUT, TSP LOOP DLC									6	6
CONDUIT SIZE		3"	3"(E)	2-3"	2-3"	3"	3"	2-3"	3-4"	2-3"(E) 1-2"(E)
CONDUIT FILL %		7	22	14	21	15	22	22	20	46

● ALL CONDUCTORS ARE NEW UNLESS OTHERWISE SPECIFIED
(E) EXISTING
* SCHEDULE 80 PVC CONDUIT PER DETAIL "E" ON DWG TRN-3C-301
** PER FIBER OPTIC COMMUNICATION DESIGN ON DWG NA-3C-301

REV	DATE	BY	APP	REG NO	EXPIRES	SEAL HOLDER	DESCRIPTION
2	12/17/13	MS	JJM	C65218	09-30-15	JASON J. MELCHOR	ECI 57
1	12/17/13	MS	JJM	C65218	09-30-15	JASON J. MELCHOR	ECI 51
0	10/19/12	IC	JJM	C65218	09-30-13	JASON J. MELCHOR	APPROVED FOR CONSTRUCTION

REVISION DATES (DESIGN STAGE ONLY)

DESIGNED BY I. CONSTANTINESCU
DRAWN BY R. CHICHIRI
CHECKED BY J. MELCHOR
IN CHARGE D. ADRIAN
DATE 10/19/12

REGISTERED PROFESSIONAL ENGINEER JASON J. MELCHOR No. C65218 Exp. 09-30-15 CIVIL STATE OF CALIFORNIA

Exposition Metro Line Construction Authority
Expo
EXPO SKANSKA RADOS
444 South Flower Street
Suite 2200
Los Angeles, CA 90071
TEL (213) 443-7463
FAX (213) 362-9481

PARSONS BRINCKERHOFF
Kimley-Horn and Associates, Inc. 350 SOUTH FIGUEROA STREET SUITE 225 LOS ANGELES, CA 90017 TEL: (213) 261-4949

EXPOSITION LRT PROJECT- PHASE 2
TRAFFIC SIGNAL
COLORADO AVENUE AT 7TH STREET
PLAN

CONTRACT NO XP8902-002
DRAWING NO TR-3C-304 REV 2
SCALE 1"=20'
SHEET NO 99 OF 108

SCALES: HORIZ SCALE: 1"=20' VERT SCALE: NO SCALE
SHEET
INDEX NUMBER

mingfang.song 4:23:37 PM 12/17/2013
Plot Driver=EXPO2-PDF-Full-BW.plt
Pentable=EXPO2-PENTABLE.tbl
c:\projectwise\pb\projectwiseint\mingfang.song\dms09100\expo2-tr-3c-304.plg

Sheet Version 2.dll

CITY DRAWING NO. 9104
SHEET NO. 99 OF 108
DATE 12/18/2013
APPROVED BY: SAM MORRISSEY, P.E. CITY TRAFFIC ENGINEER
PLANNING AND COMMUNITY DEVELOPMENT

REFERENCE:
SUBMITTED BY:
REVIEWED: DATE: 20
REVIEWED: DATE: 20
REVIEWED: DATE: 20
CITY

NO. DATE BY DESCRIPTION
REVISIONS
APPROVED

City of Santa Monica
Department of Public Works
1437 4th Street, Suite 300 Santa Monica, CA 90401
TEL. (310)458-8721 FAX. (310)393-4425
e-mail : smengineering@smgov.net

Plotted by: mingfang.song 12/17/2013 c:\projectwise\pb\projectwiseint\mingfang.song\dms09100\expo2-tr-3c-304.plg

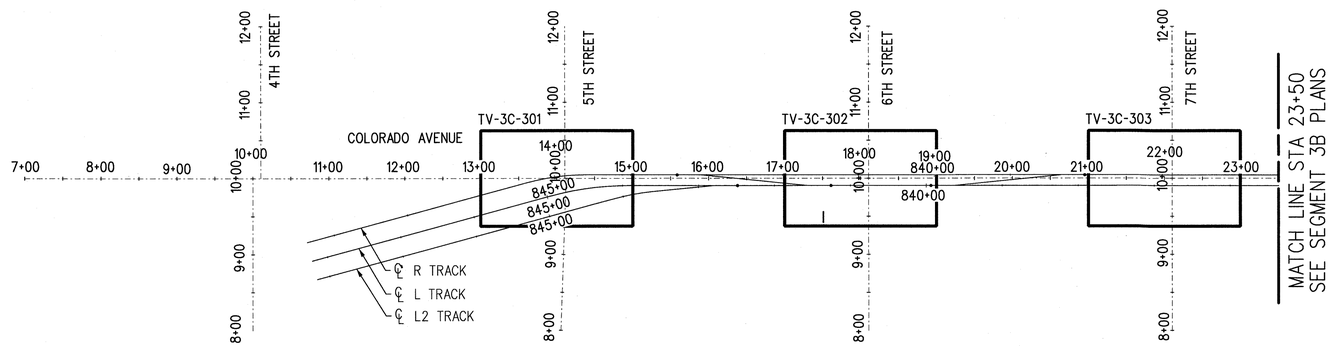

SRJV
AUG 23 2013
ISSUED FOR CONSTRUCTION

Exposition Construction Authority
Approved for Construction
Drawings - AFC
AUG 22 2013

100' 0 100' 200'

REV	DATE	BY	APP	REG NO	EXPIRES	SEAL HOLDER	DESCRIPTION
0	10/19/12	IC	JJM	C65218	09-30-13	JASON J. MELCHOR	APPROVED FOR CONSTRUCTION

REVISION DATES (DESIGN STAGE ONLY)

DESIGNED BY I. CONSTANTINESCU
DRAWN BY R. CHICHIRI
CHECKED BY J. MELCHOR
IN CHARGE D. ADRIAN
DATE 10/19/12

REGISTERED PROFESSIONAL ENGINEER JASON J. MELCHOR No. C65218 Exp. 09-30-13 CIVIL STATE OF CALIFORNIA

Exposition Metro Line Construction Authority
Expo
EXPO SKANSKA RADOS
444 South Flower Street
Suite 2200
Los Angeles, CA 90071
TEL (213) 443-7463
FAX (213) 362-9481

PARSONS BRINCKERHOFF
Kimley-Horn and Associates, Inc. 660 SOUTH FIGUEROA STREET SUITE 1040 LOS ANGELES, CA 90017 TEL (213) 443-4888

CURRENT AS OF 8/23

EXPOSITION LRT PROJECT- PHASE 2
CCTV
COLORADO AVENUE
KEY MAP
STA 7+50 TO 23+50

CONTRACT NO XP8902-002
DRAWING NO TVK-3C-301 REV 0
SCALE 1"=100'
SHEET NO 100 OF 108

justin.gatza 7:52:57 PM 10/17/2012
Plot Driver=EXPO2-PDF-Full-BW.plt Pentable=EXPO2-PENTABLE.tbl
K:\LDT_RDWY\094617000 - Expo Ph 2\Working\04 BATCH PLOT\Temp Export Files from PW\Traffic\expo2-tvk-3c-301.plg

SCALES HORIZ SCALE: 1"=100' VERT SCALE: NO SCALE
SHEET
INDEX NUMBER

Sheet Version 2.01

REFERENCE :
SUBMITTED BY: Doug DeVaine
CITY DRAWING NO. 9302
SHEET NO.: 100 OF 108
APPROVED BY : SAM MORRISSEY, P.E., CITY TRAFFIC ENGINEER
PLANNING AND COMMUNITY DEVELOPMENT
DATE : 8-19 2013

REVIEWED : DATE : 20
REVIEWED : DATE : 20
REVIEWED : DATE : 8-19 2013
CITY

NO.	DATE	BY	DESCRIPTION	APPROVED

REVISIONS

City of Santa Monica
Department of Public Works
1437 4th Street, Suite 300 Santa Monica, CA 90401
TEL. (310)458-8721 FAX. (310)393-4425
e-mail : smengineering@smgov.net

Plotted by: justin.gatza 10/17/2012 K:\LDT_RDWY\094617000 - Expo Ph 2\Working\04 BATCH PLOT\Temp Export Files from PW\Traffic\expo2-tvk-3c-301.plg

NOTES:

1. THIS PLAN ACCURATE FOR CCTV WORK ONLY.
2. FOR DISPOSITION OF ALL PROPOSED UTILITIES, SEE COMPOSITE UTILITY REARRANGEMENT PLANS.

CCTV CONSTRUCTION NOTES (THIS SHEET ONLY)

1 RELOCATE BOSCH AUTODOME 300 CAMERA FROM TEMPORARY CONSTRUCTION PHASE TO PROPOSED TRAFFIC SIGNAL. REMOVE EXISTING CCTV CABLES, INSTALL NEW COMPOSITE CAT-5 AND POWER CABLE AND ROUTE THROUGH TRAFFIC SIGNAL CONDUITS AS SHOWN PER PLAN. CONNECT CABLES TO PROVIDE INTENDED OPERATION.

CONDUCTOR SCHEDULE ●			
	CONDUIT RUN		
	1	2	3
COMPOSITE CAT-5 CABLE AND POWER CABLE	1	1	1
CONDUIT SIZE	2-4"(E)x	3-4"(E)x	2-2"(E)x 2-3"(E)x

● ALL CONDUCTORS ARE NEW UNLESS OTHERWISE NOTED
(E) EXISTING
x NEW PER TRAFFIC SIGNAL DWG TR-3C-302

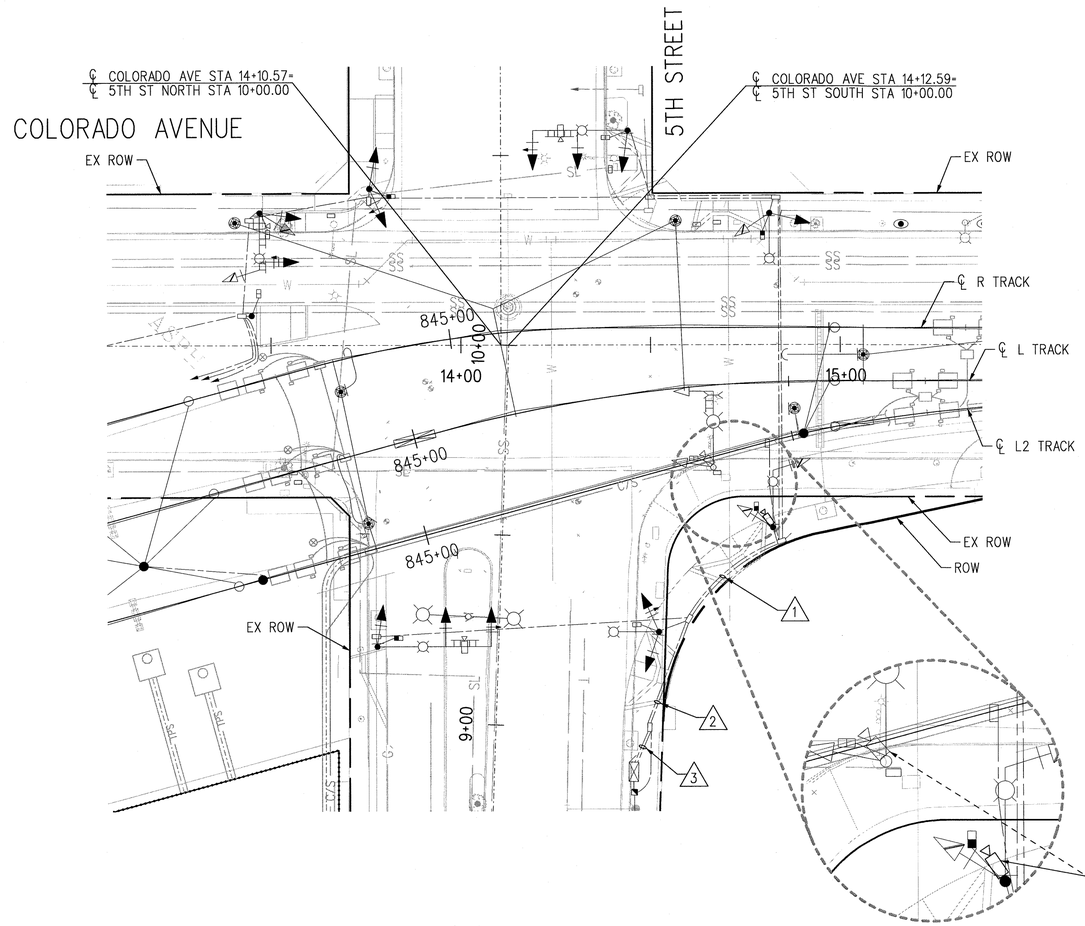

SRJV
AUG 23 2013
ISSUED FOR CONSTRUCTION

Exposition Construction Authority
Approved for Construction
Drawings - AFC
AUG 22 2013

20' 10' 0 20' 40'

REV	DATE	BY	APP	REG NO	EXPIRES	SEAL HOLDER	DESCRIPTION
0	10/19/12	IC	JJM	C65218	09-30-13	JASON J. MELCHOR	APPROVED FOR CONSTRUCTION

DESIGNED BY I. CONSTANTINESCU
DRAWN BY R. CHICHIRI
CHECKED BY J. MELCHOR
IN CHARGE D. ADRIAN
DATE 10/19/12

REGISTERED PROFESSIONAL ENGINEER JASON J. MELCHOR No. C65218 Exp. 09-30-13 CIVIL STATE OF CALIFORNIA

Exposition Metro Line Construction Authority
Expo
EXPO SKANSKA RADOS
444 South Flower Street
Suite 2200
Los Angeles, CA 90071
TEL (213) 443-7463
FAX (213) 362-9481

PARSONS BRINCKERHOFF
Kimley-Horn and Associates, Inc. 660 SOUTH FIGUEROA STREET SUITE 1040 LOS ANGELES, CA 90017 TEL (213) 741-0145

CURRENT AS OF

EXPOSITION LRT PROJECT- PHASE 2
CCTV
COLORADO AVENUE AT 5TH STREET
PLAN

CONTRACT NO XP8902-002
DRAWING NO TV-3C-301 REV 0
SCALE 1"=20'
SHEET NO 101 OF 108

justin.gatza 7:52:51 PM 10/17/2012
Plot Driver=EXPO2-PDF-Full-BW.plt Pentable=EXPO2-PENTABLE.tbl
K:\LDT_RDWY\094617000 - Expo Ph 2\Working\04 BATCH PLOT\Temp Export Files from PW\Traffic\expo2-tv-3c-301.plg

SCALES HORIZ SCALE: 1"=20' VERT SCALE: NO SCALE | SHEET | INDEX NUMBER

REVISION DATES (DESIGN STAGE ONLY)

Sheet Version 2.01

REFERENCE :
SUBMITTED BY: Dwey de Veirid
CITY DRAWING NO. 9302
SHEET NO. 101 OF 108
DATE : 8-19 2013
APPROVED BY : SAM MORRISSEY, P.E., CITY TRAFFIC ENGINEER
PLANNING AND COMMUNITY DEVELOPMENT

REVIEWED : DATE : 20__
REVIEWED : DATE : 20__
REVIEWED : DATE : 8-19 2013
CITY

NO.	DATE	BY	DESCRIPTION	APPROVED
			REVISIONS	

City of Santa Monica
Department of Public Works
1437 4th Street, Suite 300 Santa Monica, CA 90401
TEL. (310)458-8721 FAX. (310)393-4425
e-mail : smengineering@smgov.net

Plotted by: justin.gatza 10/17/2012 K:\LDT_RDWY\094617000 - Expo Ph 2\Working\04 BATCH PLOT\Temp Export Files from PW\Traffic\expo2-tv-3c-301.plg

NOTES:

1. THIS PLAN ACCURATE FOR CCTV WORK ONLY.
2. FOR DISPOSITION OF ALL PROPOSED UTILITIES, SEE COMPOSITE UTILITY REARRANGEMENT PLANS.

CCTV CONSTRUCTION NOTES (THIS SHEET ONLY)

1 RELOCATE BOSCH AUTODOME 300 CAMERA FROM TEMPORARY CONSTRUCTION PHASE TO PROPOSED TRAFFIC SIGNAL. REMOVE EXISTING CCTV CABLES, INSTALL NEW COMPOSITE CAT-5 AND POWER CABLE AND ROUTE THROUGH TRAFFIC SIGNAL CONDUITS AS SHOWN PER PLAN. CONNECT CABLES TO PROVIDE INTENDED OPERATION.

CONDUCTOR SCHEDULE ●		
	CONDUIT RUN	
	1	2
COMPOSITE CAT-5 CABLE AND POWER CABLE	1	1
CONDUIT SIZE	3-4"(E)*	2-3"(E) 1-2"(E)

● ALL CONDUCTORS ARE NEW UNLESS OTHERWISE NOTED
(E) EXISTING
* NEW PER TRAFFIC SIGNAL DWG TR-3C-303

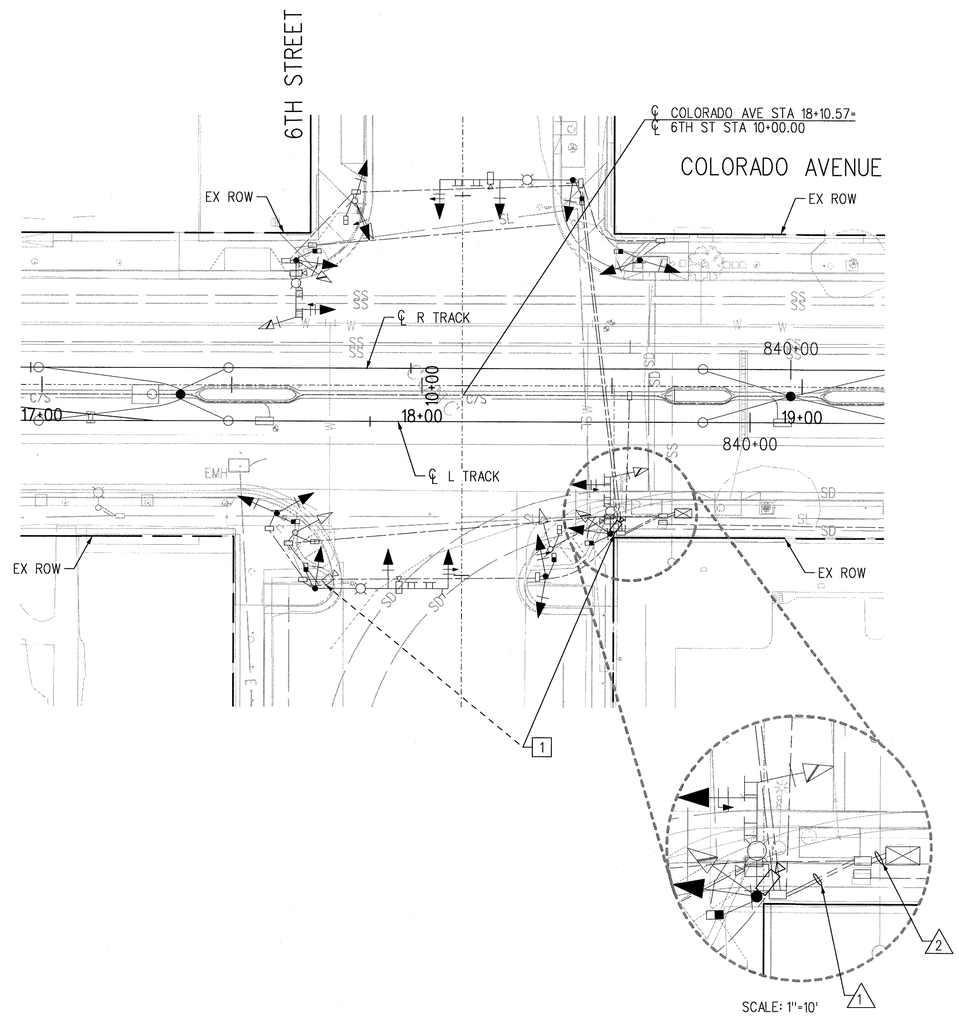

SRJV
AUG 23 2013
ISSUED FOR CONSTRUCTION

Exposition Construction Authority
Approved for Construction
Drawings - AFC
AUG 22 2013

20' 10' 0 20' 40'

REV	DATE	BY	APP	REG NO	EXPIRES	SEAL HOLDER	DESCRIPTION
0	10/19/12	IC	JJM	C65218	09-30-13	JASON J. MELCHOR	APPROVED FOR CONSTRUCTION

DESIGNED BY I. CONSTANTINESCU
DRAWN BY R. CHICHIRI
CHECKED BY J. MELCHOR
IN CHARGE D. ADRIAN
DATE 10/19/12

REGISTERED PROFESSIONAL ENGINEER
JASON J. MELCHOR
No. C65218
Exp. 09-30-13
CIVIL
STATE OF CALIFORNIA

Exposition Metro Line Construction Authority
Expo

EXPO SKANSKA RADOS
444 South Flower Street
Suite 2200
Los Angeles, CA 90071
TEL (213) 443-7463
FAX (213) 362-9481

PARSONS BRINCKERHOFF
Kimley-Horn and Associates, Inc.
660 SOUTH FIGUEROA STREET
SUITE 1040
LOS ANGELES, CA 90015
TEL: (213) 261-5040

CURRENT PLANS

EXPOSITION LRT PROJECT- PHASE 2
CCTV
COLORADO AVENUE AT 6TH STREET
PLAN

CONTRACT NO XP8902-002
DRAWING NO TV-3C-302 REV 0
SCALE 1"=20'
SHEET NO 102 OF 108

justin.gatza 7:52:52 PM 10/17/2012
Plot Driver=EXPO2-PDF-Full-BW.plt Pentable=EXPO2-PENTABLE.tbl

K:\LDT_RDWY\094617000 - Expo Ph 2\Working\04 BATCH PLOT\Temp Export Files from PW\Traffic\expo2-tv-3c-302.plg

SCALES HORIZ SCALE: 1"=20' VERT SCALE: NO SCALE
SHEET
INDEX NUMBER

REVISION DATES (DESIGN STAGE ONLY)

Sheet Version 2.01

REFERENCE:
SUBMITTED BY: Greg deVinnie
CITY DRAWING NO. 9302
SHEET NO.: 102 OF 108
APPROVED BY: DATE: 8-19 2013
SAM MORRISSEY, P.E., CITY TRAFFIC ENGINEER
PLANNING AND COMMUNITY DEVELOPMENT

REVIEWED: DATE: 20
REVIEWED: DATE: 20
REVIEWED: DATE: 8-19 2013
CITY

REVISIONS

NO.	DATE	BY	DESCRIPTION	APPROVED

City of Santa Monica
Department of Public Works
1437 4th Street, Suite 300 Santa Monica, CA 90401
TEL. (310)458-8721 FAX. (310)393-4425
e-mail : smengineering@smgov.net

Plotted by: justin.gatza 10/17/2012 K:\LDT_RDWY\094617000 - Expo Ph 2\Working\04 BATCH PLOT\Temp Export Files from PW\Traffic\expo2-tv-3c-302.plg

NOTES:

1. THIS PLAN ACCURATE FOR CCTV WORK ONLY.
2. FOR DISPOSITION OF ALL PROPOSED UTILITIES, SEE COMPOSITE UTILITY REARRANGEMENT PLANS.

CCTV CONSTRUCTION NOTES (THIS SHEET ONLY)

1 RELOCATE BOSCH AUTODOME 300 CAMERA FROM TEMPORARY CONSTRUCTION PHASE TO PROPOSED TRAFFIC SIGNAL. REMOVE EXISTING CCTV CABLES, INSTALL NEW COMPOSITE CAT-5 AND POWER CABLE AND ROUTE THROUGH TRAFFIC SIGNAL CONDUITS AS SHOWN PER PLAN. CONNECT CABLES TO PROVIDE INTENDED OPERATION.

CONDUCTOR SCHEDULE ●

	CONDUIT RUN		
	1	2	3
COMPOSITE CAT-5 CABLE AND POWER CABLE	1	1	1
CONDUIT SIZE	2-3"(E)*	3-4"(E)*	2-3"(E) 1-2"(E)

● ALL CONDUCTORS ARE NEW UNLESS OTHERWISE NOTED
(E) EXISTING
* NEW PER TRAFFIC SIGNAL DWG TR-3C-304

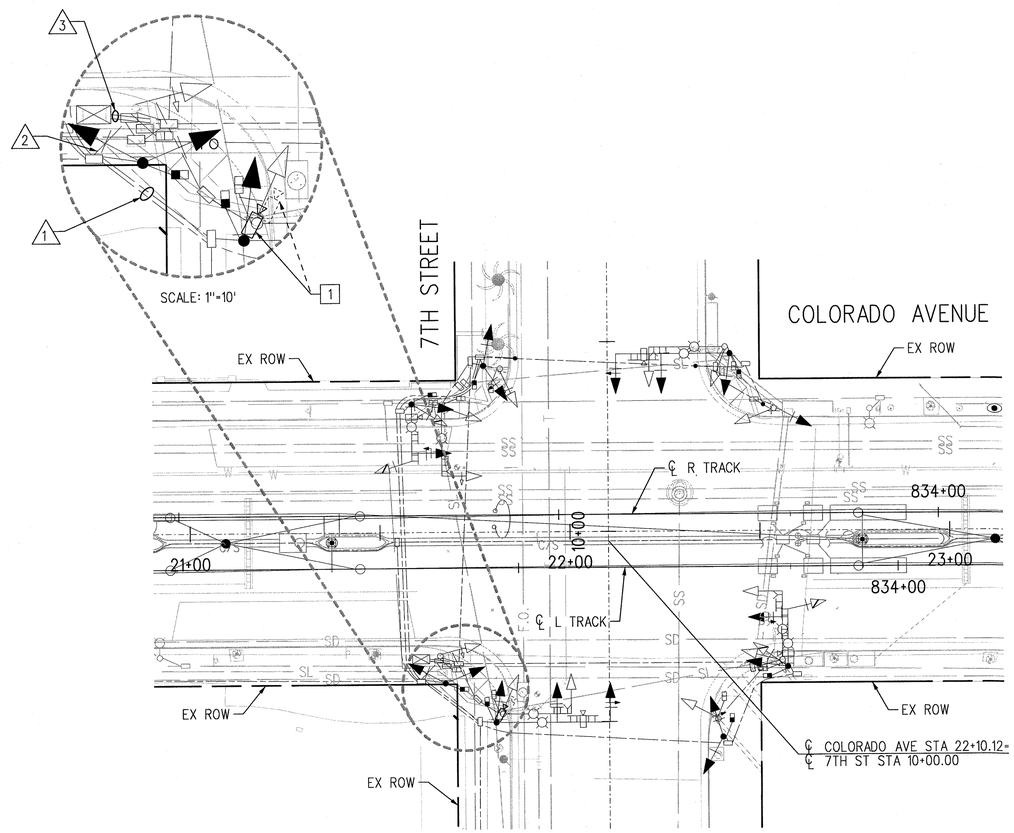

SRJV
AUG 23 2013
ISSUED FOR CONSTRUCTION

Exposition Construction Authority
Approved for Construction
Drawings - AFC
AUG 22 2013

20' 10' 0 20' 40'

REV	DATE	BY	APP	REG NO	EXPIRES	SEAL HOLDER	DESCRIPTION
0	10/19/12	IC	JJM	C65218	09-30-13	JASON J. MELCHOR	APPROVED FOR CONSTRUCTION

REVISION DATES (DESIGN STAGE ONLY)

DESIGNED BY I. CONSTANTINESCU
DRAWN BY R. CHICHIRI
CHECKED BY J. MELCHOR
IN CHARGE D. ADRIAN
DATE 10/19/12

REGISTERED PROFESSIONAL ENGINEER JASON J. MELCHOR No. C65218 Exp. 09-30-13 CIVIL STATE OF CALIFORNIA

Exposition Metro Line Construction Authority
Expo
EXPO SKANSKA RADOS
444 South Flower Street
Suite 2200
Los Angeles, CA 90071
TEL (213) 443-7463
FAX (213) 362-9481

PARSONS BRINCKERHOFF
Kimley-Horn and Associates, Inc. 660 SOUTH FIGUEROA STREET SUITE 1040 LOS ANGELES, CA 90017 213-433-2400

CURRENT STATUS

EXPOSITION LRT PROJECT- PHASE 2
CCTV
COLORADO AVENUE AT 7TH STREET
PLAN

CONTRACT NO XP8902-002
DRAWING NO TV-3C-303 REV 0
SCALE 1"=20'
SHEET NO 103 OF 108

justin.gatza 7:52:53 PM
Plot Driver=EXPO2-PDF-Full-BW.plt
10/17/2012
Pentable=EXPO2-PENTABLE.tbl
K:\LDT_RDWY\094617000 - Expo Ph 2\Working\04 BATCH PLOT\Temp Export Files from PW\Traffic\expo2-tv-3c-303.plg

SCALES HORIZ SCALE: 1"=20' VERT SCALE: NO SCALE
SHEET
INDEX NUMBER

Sheet Version 2.01

REFERENCE:
SUBMITTED BY: Doug deVerell
CITY DRAWING NO. 9302
SHEET NO. 103 OF 108
DATE: 8-19 2013
APPROVED BY: SAM MORRISSEY, P.E., CITY TRAFFIC ENGINEER
PLANNING AND COMMUNITY DEVELOPMENT

REVIEWED: DATE: 20__
REVIEWED: DATE: 20__
REVIEWED: DATE: 8-19 2013
APPROVED CITY

NO.	DATE	BY	DESCRIPTION

REVISIONS

City of Santa Monica
Department of Public Works
1437 4th Street, Suite 300 Santa Monica, CA 90401
TEL. (310)458-8721 FAX. (310)393-4425
e-mail : smengineering@smgov.net

Plotted by: justin.gatza 10/17/2012 K:\LDT_RDWY\094617000 - Expo Ph 2\Working\04 BATCH PLOT\Temp Export Files from PW\Traffic\expo2-tv-3c-303.plg

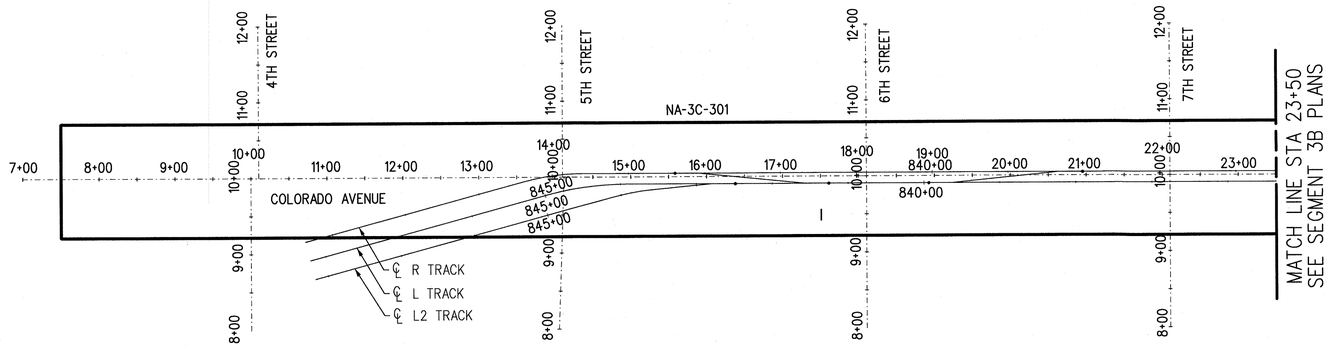

SRJV
AUG 28 2013
ISSUED FOR CONSTRUCTION

Expositon Construction Authority
Approved for Construction
Drawings - AFC
AUG 22 2013

100' 0 100' 200'

REV	DATE	BY	APP	REG NO	EXPIRES	SEAL HOLDER	DESCRIPTION
0	10/19/12	IC	JJM	C65218	09-30-13	JASON J. MELCHOR	APPROVED FOR CONSTRUCTION

REVISION DATES (DESIGN STAGE ONLY)

DESIGNED BY I. CONSTANTINESCU
DRAWN BY R. CHICHIRI
CHECKED BY J. MELCHOR
IN CHARGE D. ADRIAN
DATE 10/19/12

REGISTERED PROFESSIONAL ENGINEER JASON J. MELCHOR No. C65218 Exp. 09-30-13 CIVIL STATE OF CALIFORNIA

Exposition Metro Line Construction Authority
Expo

EXPO SKANSKA RADOS
444 South Flower Street
Suite 2200
Los Angeles, CA 90071
TEL (213) 443-7463
FAX (213) 362-9481

PARSONS BRINCKERHOFF
Kimley-Horn and Associates, Inc. 860 SOUTH FIGUEROA STREET SUITE 1040 LOS ANGELES, CA 90017 CELL (213) 985-0040

CURRENT STATUS

EXPOSITION LRT PROJECT- PHASE 2
FIBER OPTIC
COLORADO AVENUE
KEY MAP
STA 7+50 TO 23+50

CONTRACT NO XP8902-002
DRAWING NO NK-3C-301
REV 0
SCALE 1"=100'
SHEET NO 104 OF 108

justin.gatza 10:15:04 AM 10/19/2012
Plot Driver=EXPO2-PDF-Full-BW.plt
Pentable=EXPO2-PENTABLE.tbl
c:\projectwise\pb\projectwiseint\justin.gatza\dms09100\expo2-nk-3c-301.plg

SCALES HORIZ SCALE: 1"=100' VERT SCALE: NO SCALE
SHEET
INDEX NUMBER

REFERENCE :
SUBMITTED BY: Dwayne DeVenish
CITY DRAWING NO. 9302
SHEET NO.: 104 OF 108
DATE: 8-19-2013
APPROVED BY: SAM MORRISSEY, P.E., CITY TRAFFIC ENGINEER
PLANNING AND COMMUNITY DEVELOPMENT

REVIEWED : DATE : 20__
REVIEWED : DATE : 20__
REVIEWED : DATE 8-19-2013
CITY APPROVED

NO.	DATE	BY	DESCRIPTION

REVISIONS

City of Santa Monica
Department of Public Works
1437 4th Street, Suite 300 Santa Monica, CA 90401
TEL. (310)458-8721 FAX. (310)393-4425
e-mail : smengineering@smgov.net

Plotted by: justin.gatza 10/19/2012 c:\projectwise\pb\projectwiseint\justin.gatza\dms09100\expo2-nk-3c-301.plg

Sheet Version 2.01

NOTE: THIS PLAN ACCURATE FOR FIBER OPTIC COMMUNICATION WORK ONLY.

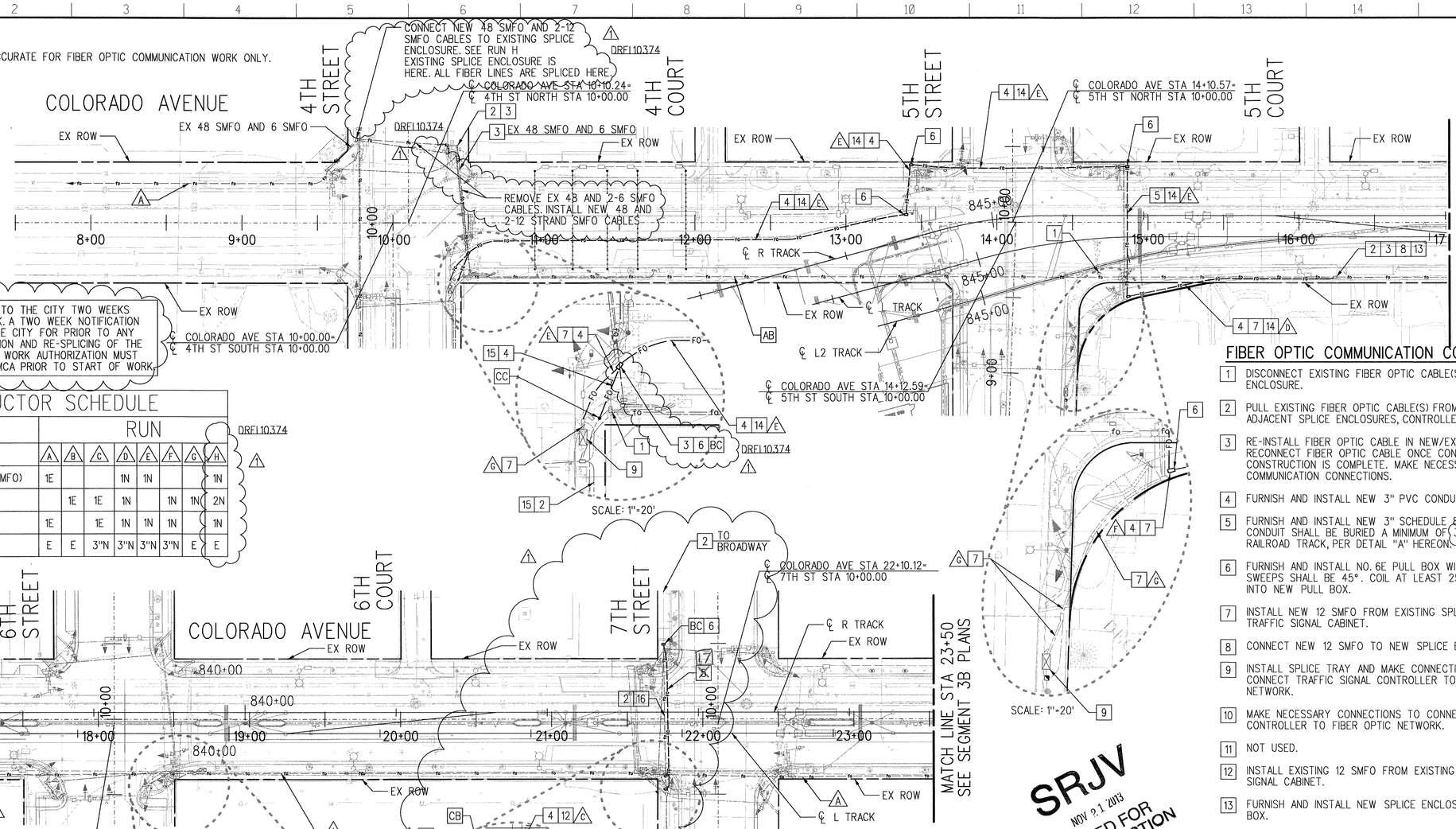

CONDUCTOR SCHEDULE

DRFI10374

	RUN							
	A	B	C	D	E	F	G	H
DISTRIBUTION CABLE (48 SMFO)	1E			1N	1N			1N
DROP CABLE (12 SMFO)		1E	1E	1N		1N	1N	2N
TRACE WIRE	1E		1E	1N	1N	1N		1N
CONDUIT SIZE	E	E	3"N	3"N	3"N	3"N	E	E

E EXISTING
N NEW

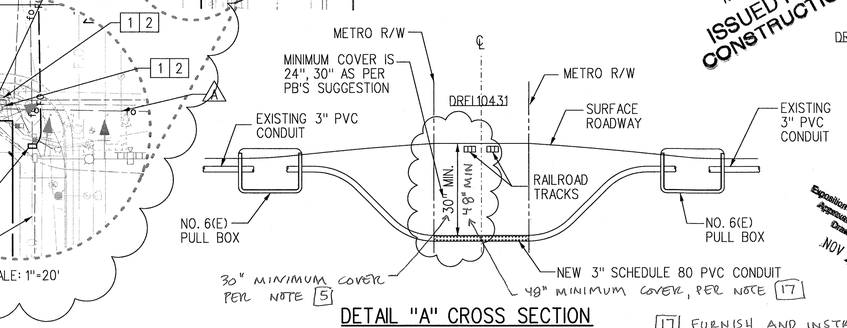

DETAIL "A" CROSS SECTION

(NOT TO SCALE)

17 FURNISH AND INSTALL NEW 3" SCHEDULE 80 PVC CONDUIT, FIBER READY. CONDUIT SHALL BE BURIED A MINIMUM OF 48" WHEN INSTALLED UNDER RAILROAD TRACK, PER DETAIL "A" HEREON.

FIBER OPTIC COMMUNICATION CONSTRUCTION NOTES

1. DISCONNECT EXISTING FIBER OPTIC CABLE(S) FROM EXISTING SPLICE ENCLOSURE.
2. PULL EXISTING FIBER OPTIC CABLE(S) FROM EXISTING CONDUIT(S) BETWEEN ADJACENT SPLICE ENCLOSURES, CONTROLLER CABINET, OR PULL BOX.
3. RE-INSTALL FIBER OPTIC CABLE IN NEW/EXISTING CONDUIT AND RECONNECT FIBER OPTIC CABLE ONCE CONDUIT AND PULL BOX CONSTRUCTION IS COMPLETE. MAKE NECESSARY SPLICES TO RE-ESTABLISH COMMUNICATION CONNECTIONS.
4. FURNISH AND INSTALL NEW 3" PVC CONDUIT.
5. FURNISH AND INSTALL NEW 3" SCHEDULE 80 PVC CONDUIT, FIBER READY. CONDUIT SHALL BE BURIED A MINIMUM OF 30" WHEN INSTALLED UNDER RAILROAD TRACK, PER DETAIL "A" HEREON.
6. FURNISH AND INSTALL NO. 6E PULL BOX WITH EXTENSION. CONDUIT SWEEPS SHALL BE 45°. COIL AT LEAST 25 FEET OF FIBER OPTIC CABLE INTO NEW PULL BOX.
7. INSTALL NEW 12 SMFO FROM EXISTING SPLICE ENCLOSURE TO PROPOSED TRAFFIC SIGNAL CABINET.
8. CONNECT NEW 12 SMFO TO NEW SPLICE ENCLOSURE.
9. INSTALL SPLICE TRAY AND MAKE CONNECTIONS AS NECESSARY TO CONNECT TRAFFIC SIGNAL CONTROLLER TO EXISTING FIBER OPTIC NETWORK.
10. MAKE NECESSARY CONNECTIONS TO CONNECT TRAFFIC SIGNAL CONTROLLER TO FIBER OPTIC NETWORK.
11. NOT USED.
12. INSTALL EXISTING 12 SMFO FROM EXISTING SPLICE CLOSURE TO TRAFFIC SIGNAL CABINET.
13. FURNISH AND INSTALL NEW SPLICE ENCLOSURE IN NEW/EXISTING PULL BOX.
14. INSTALL NEW 48 SMFO WITH 1*10 GREEN TRACE WIRE IN NEW/EXISTING CONDUIT.
15. INSTALL NEW 12 SMFO AND 1*10 GREEN TRACE WIRE IN NEW/EXISTING CONDUIT FROM SPLICE ENCLOSURE AT NORTHWEST CORNER OF 4TH/COLORADO TO I-10 OFF RAMP. TERMINATE NEW 12 SMFO IN EXISTING 332 CABINET. (DRFI10374)
16. REMOVE EXISTING FIBER OPTIC CONDUIT WHERE IT WOULD CONFLICT WITH GUIDEWAY AREA.

AB ABANDON. IF APPLIED TO CONDUIT, REMOVE CONDUCTORS.
BC INSTALL PULL BOX IN EXISTING CONDUIT RUN.
CB INSTALL CONDUIT INTO EXISTING PULL BOX.

40' 20' 0 40' 80'

SRJV NOV 21 2013 ISSUED FOR CONSTRUCTION

Exposition Construction Authority Approved for Construction Drawings-APC NOV 20 2013

REV	DATE	BY	APP	REG NO	EXPIRES	SEAL HOLDER	DESCRIPTION
1	11/07/13	MS	JJM	C65218	09-30-15	JASON J. MELCHOR	ECI 58, DRFI 10374, DRFI 10431
0	10/19/12	IC	JJM	C65218	09-30-13	JASON J. MELCHOR	APPROVED FOR CONSTRUCTION

DESIGNED BY I. CONSTANTINESCU
DRAWN BY R. CHICHIRI
CHECKED BY J. MELCHOR
IN CHARGE D. ADRIAN
DATE 10/19/12

REGISTERED PROFESSIONAL ENGINEER JASON J. MELCHOR No. C65218 Exp. 09-30-15 CIVIL STATE OF CALIFORNIA

Exposition Metro Line Construction Authority
Expo
EXPO SKANSKA RADOS
444 South Flower Street
Suite 2200
Los Angeles, CA 90071
TEL (213) 443-7463
FAX (213) 362-9481

PARSONS BRINCKERHOFF
Kimley-Horn and Associates, Inc. 660 SOUTH FIGUEROA STREET SUITE 1400 LOS ANGELES, CA 90017 TEL: (213) 261-1040

EXPOSITION LRT PROJECT- PHASE 2
FIBER OPTIC
COLORADO AVENUE
PLAN
STA 7+50 TO 23+50

CONTRACT NO XP8902-002
DRAWING NO NA-3C-301 REV 1
SCALE 1"=40'
SHEET NO 105 OF 108

mingfang.song 5:07:00 PM 11/7/2013
Plot Driver=EXPO2-PDF-Full-BW.plt Pentable=EXPO2-PENTABLE.tbl
c:\projectwise\pb\projectwiseint\mingfang.song\dms09100\expo2-na-3c-301.plg

SCALES: HORIZ SCALE: 1"=40' VERT SCALE: NO SCALE
SHEET
INDEX NUMBER

REVISION DATES (DESIGN STAGE ONLY)

Sheet Version 2.01

REFERENCE:
SUBMITTED BY:
CITY DRAWING NO. 9302
SHEET NO: 105 OF 108
APPROVED BY: SAM MORRISSEY, P.E., CITY TRAFFIC ENGINEER, PLANNING AND COMMUNITY DEVELOPMENT
DATE: 11-20 2013

REVIEWED: DATE: 20
REVIEWED: DATE 11-20 2013
REVIEWED: DATE 11-20 2013 CITY

NO. DATE BY DESCRIPTION REVISIONS APPROVED

City of Santa Monica
Department of Public Works
1437 4th Street, Suite 300 Santa Monica, CA 90401
TEL. (310)458-8721 FAX. (310)393-4425
e-mail: smengineering@smgov.net

Plotted by: mingfang.song 11/7/2013 c:\projectwise\pb\projectwiseint\mingfang.song\dms09100\expo2-na-3c-301.plg

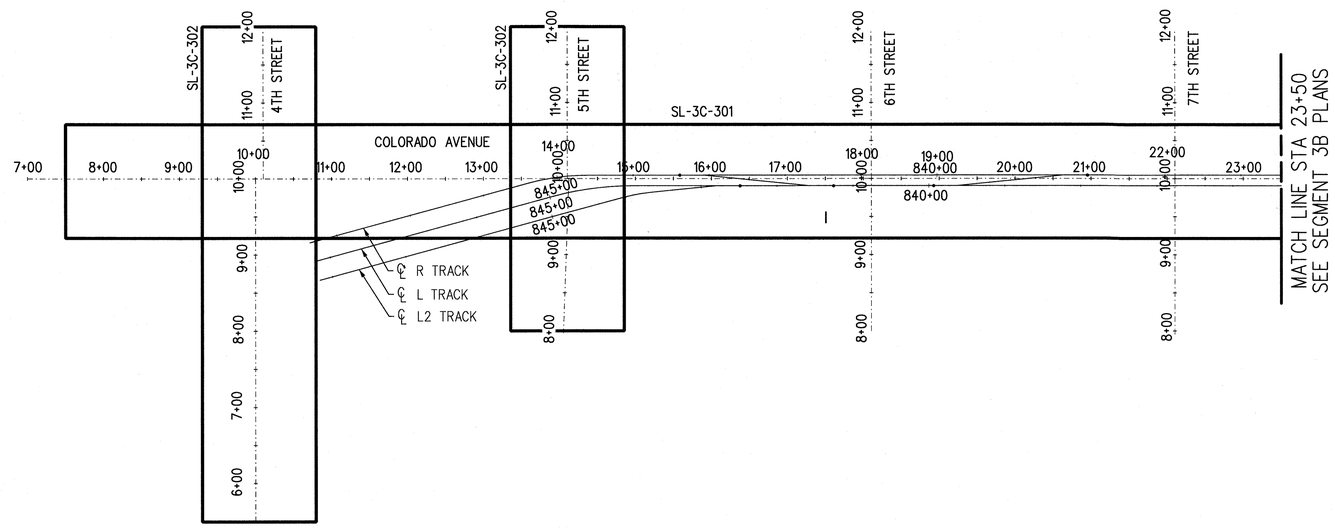

SRJV
JAN 17 2014
ISSUED FOR CONSTRUCTION

Exposition Construction Authority
Approved for Construction
Drawings - AFC
JAN 16 2014

100' 0 100' 200'

REV	DATE	BY	APP	REG NO	EXPIRES	SEAL HOLDER	DESCRIPTION
0	10/19/12	IC	JJM	C65218	09-30-13	JASON J. MELCHOR	APPROVED FOR CONSTRUCTION

DESIGNED BY I. CONSTANTINESCU
DRAWN BY R. CHICHIRI
CHECKED BY J. MELCHOR
IN CHARGE D. ADRIAN
DATE 10/19/12

REGISTERED PROFESSIONAL ENGINEER
JASON J. MELCHOR
No. C65218
Exp. 09-30-13
CIVIL
STATE OF CALIFORNIA

Exposition Metro Line Construction Authority
Expo

EXPO SKANSKA RADOS
444 South Flower Street
Suite 2200
Los Angeles, CA 90071
TEL (213) 443-7463
FAX (213) 362-9481

PARSONS BRINCKERHOFF
KEYSTONE CONSULTANTS
Kimley-Horn and Associates, Inc.
660 SOUTH FIGUEROA STREET
SUITE 1010
LOS ANGELES, CA 90017
TEL: (213) 261-4040

EXPOSITION LRT PROJECT- PHASE 2
STREET LIGHTING
COLORADO AVENUE
KEY MAP
STA 7+50 TO 23+50

CONTRACT NO XP8902-002
DRAWING NO SLK-3C-301 REV 0
SCALE 1"=100'
SHEET NO 106 OF 108

justin.gatza 7:52:26 PM 10/17/2012
Plot Driver=EXPO2-PDF-Full-BW.plt Pentable=EXPO2-PENTABLE.tbl
K:\LDT_RDWY\094617000 - Expo Ph 2\Working\04 BATCH PLOT\Temp Export Files from PW\Traffic\expo2-slk-3c-301.plg

SCALES HORIZ SCALE: 1"=100' VERT SCALE: NO SCALE
SHEET
INDEX NUMBER

REVISION DATES (DESIGN STAGE ONLY)

Sheet Version 2.01

REFERENCE :
SUBMITTED BY:
CITY DRAWING NO. 9104
SHEET NO.: 106 OF 108
APPROVED BY: DATE: 1-15 2014
SAM MORRISSEY, P.E., CITY TRAFFIC ENGINEER
PLANNING AND COMMUNITY DEVELOPMENT

REVIEWED : DATE : 20
REVIEWED : DATE : 1-15 2014
REVIEWED : DATE : 1-15 2014
CITY

NO.	DATE	BY	DESCRIPTION	APPROVED

REVISIONS

City of Santa Monica
Department of Public Works
1437 4th Street, Suite 300 Santa Monica, CA 90401
TEL. (310)458-8721 FAX. (310)393-4425
e-mail : smengineering@smgov.net

Plotted by: justin.gatza 10/17/2012 K:\LDT_RDWY\094617000 - Expo Ph 2\Working\04 BATCH PLOT\Temp Export Files from PW\Traffic\expo2-slk-3c-301.plg

NOTE: THIS PLAN ACCURATE FOR STREET LIGHTING WORK ONLY.

5' 10"

x LOCATE 5.5' FROM CENTER OF STRING LIGHT POLE TO RIGHT-OF-WAY

1. ALL WIRING/INSULATION SHALL BE THW.
2. THERE NEEDS TO BE A WEATHER PROOF HOLDER INSTALLED WITH A 5 AMP FUSE IN THE PULL BOX NEXT TO EACH STREET LIGHT POLE. THREE #10 THW WIRES NEED TO BE INSTALLED IN THE PULL BOX FROM THE FUSE HOLDER TO THE STREET LIGHT FIXTURE RED OR BLACK DEPENDING ON THE COLOR OF THE CIRCUIT WIRE WHITE AND GREEN.
3. INSTALL A 4 WIRE CIRCUIT SYSTEM (HOT-HOT-NEUTRAL-GROUND) WITH AN A-B CONFIGURATION WHERE RED/SHITE CONNECTED TO ODD NUMBER POLES AND BLACK/WHITE CONNECTED TO EVEN NUMBER POLES.

(3RFI 20062)

LEGEND

- RIGHT OF WAY
- CENTERLINE
- EXISTING SIGNALIZED INTERSECTION
- PROPOSED STREET LIGHT
- PROPOSED PULL BOX
- PROPOSED CONDUIT
- EXISTING POWER POLE
- EXISTING STREET LIGHT
- PROPOSED SERVICE CABINET
- EXISTING SERVICE CABINET

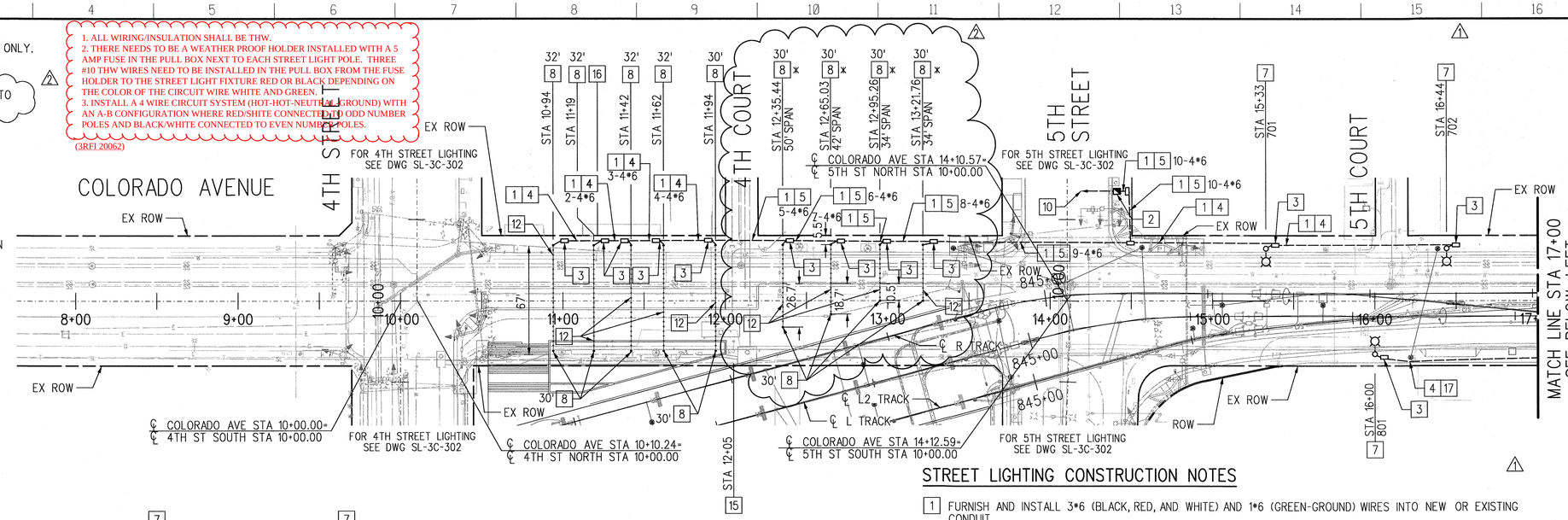

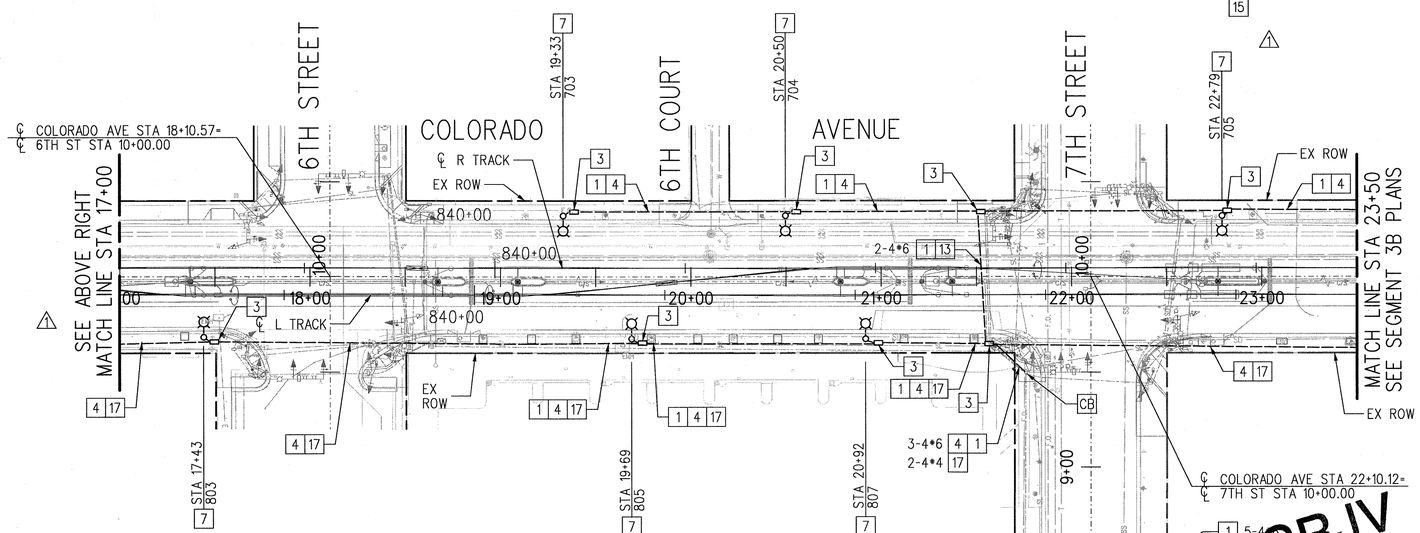

CIRCUIT DIAGRAM 1A, STRING LIGHTS

NOT TO SCALE

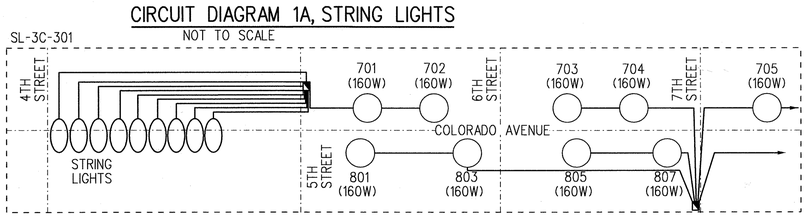

CIRCUIT DIAGRAM 2A, 2B, 2C, 2D, 2E

NOT TO SCALE

FOR STREET LIGHTING CIRCUIT CONTINUATION SEE SEGMENT 3B PLANS

SRJV APR 14 2014 ISSUED FOR CONSTRUCTION

40' 20' 0 40' 80'

STREET LIGHTING CONSTRUCTION NOTES

1. FURNISH AND INSTALL 3*6 (BLACK, RED, AND WHITE) AND 1*6 (GREEN-GROUND) WIRES INTO NEW OR EXISTING CONDUIT.
2. FURNISH AND INSTALL NEW METERED TYPE III-CF ELECTRICAL SERVICE ENCLOSURE, 120V/240V WITH 2-100A METERS FOR STREET LIGHTING, AND 2 SINGLE POLE, 30 AMP CIRCUIT BREAKER FOR EACH NEW LIGHTING CIRCUIT.
3. FURNISH AND INSTALL *3 PULL BOX.
4. FURNISH AND INSTALL 2" CONDUIT.
5. FURNISH AND INSTALL 4" CONDUIT.
6. FURNISH AND INSTALL TYPE C-1-A 26' CONCRETE POLE AND CONSTRUCT FOUNDATION PER SSPWC STANDARD PLAN 430-1, 6' TOP MOUNTED MAST ARM-TYPE II PER SSPWC STANDARD PLAN 434-1 WITH LEOTEK ECOBRA-HEAD STREET LIGHT, EC3-11M-MV-NW-3-GY-700MA, 4000K.
7. FURNISH AND INSTALL PHILLIPS LUMEC 30' ROUND STEEL POLE, SPR5V-30 WITH PHILLIPS LUMEC CAPELLA 160W, 4000K LED. INSTALL FOUNDATION PER SPPWC STANDARD PLAN 429-1 MODIFIED TO ACCOMMODATE LUMEC POLE BOLT CONFIGURATION PER MANUFACTURER'S SPECIFICATIONS.
8. FURNISH AND INSTALL POLE AND CONSTRUCT FOUNDATION PER SSPWC STANDARD PLAN 430-1 FOR STRING LIGHTING. HEIGHT AS NOTED. FIELD ADJUST SO THAT TOP OF POLE IS AT SAME HEIGHT AS CROSS STREET COUNTERPART.
9. NOT USED.
10. FURNISH AND INSTALL 3"C CONDUIT WITH PULL ROPE PER SCE REQUIREMENTS. SERVICE POINT CONNECTION PENDING SCE COORDINATION.
11. INSTALL MODIFIED FOUNDATION PER DETAIL 1 ON SHEET SLN-3B-301 IN LIEU OF STANDARD FOUNDATION.
12. FURNISH AND INSTALL LED STRING LIGHTS AT 24" LAMP SPACING. FURNISH AND INSTALL LIGHT COLORED CABLE FOR EXPOSED WIRING. INSTALL STRING LIGHTS FROM TOP OF POLE TO TOP OF POLE. CABLE SAG SHALL BE A MINIMUM OF 26' ABOVE STREET SURFACE.
13. FURNISH AND INSTALL 2" RIGID STEEL CONDUIT PER DETAIL "A" ON DWG NA-3B-301.
14. REMOVE EXISTING 200W HIGH PRESSURE SODIUM FIXTURE FROM EXISTING STREET LIGHTS AND REPLACE WITH LEOTEK ECOBRA-HEAD STREET LIGHT, EC7-18M-MV-NW-3-GY-700MA, 4000K FIXTURE. RECONNECT NECESSARY STREET LIGHT WIRES FOR FUNCTIONING STREET LIGHT SYSTEM. EXISTING STREET LIGHT POLE TO REMAIN IN PLACE.
15. REMOVE AND SALVAGE EXISTING STREET LIGHT POLE AND LUMINAIRE. REMOVE EXISTING FOUNDATION. SEE GENERAL NOTE 14 ON TRN-3C-301 FOR FOUNDATION REMOVAL.
16. PROTECT EXISTING STREET LIGHT IN PLACE.
17. FURNISH AND INSTALL 3*4 (BLACK, RED, AND WHITE) AND 1*4 (GREEN-GROUND) WIRES INTO NEW OR EXISTING CONDUIT.
18. INSTALL MODIFIED FOUNDATION PER DETAIL 2 ON SHEET SLN-3B-301 IN LIEU OF STANDARD FOUNDATION.

CB INSTALL CONDUIT IN EXISTING PULL BOX.

REV	DATE	BY	APP	REG NO	EXPIRES	SEAL HOLDER	DESCRIPTION
2	03/24/14	MS	JJM	C65218	09-30-15	JASON J. MELCHOR	ECI93
1	02/17/14	MB	JJM	C65218	09-30-15	JASON J. MELCHOR	ECI57
0	06/14/13	IC	JJM	C65218	09-30-13	JASON J. MELCHOR	APPROVED FOR CONSTRUCTION

REVISION DATES (DESIGN STAGE ONLY)

DESIGNED BY I. CONSTANTINESCU
DRAWN BY M. BIERY
CHECKED BY J. MELCHOR
IN CHARGE D. ADRIAN
DATE 06/14/13

REGISTERED PROFESSIONAL ENGINEER JASON J. MELCHOR No. C65218 Exp. 09-30-15 CIVIL STATE OF CALIFORNIA

Exposition Metro Line Construction Authority
Expo
EXPO SKANSKA RADOS
444 South Flower Street
Suite 2200
Los Angeles, CA 90071
TEL (213) 443-7463
FAX (213) 362-9481

PARSONS BRINCKERHOFF
Kimley-Horn and Associates, Inc. 350 SOUTH FIGUEROA STREET SUITE 400 LOS ANGELES, CA 90017 TEL: (213) 261-4040

EXPOSITION LRT PROJECT- PHASE 2
Exposition Construction Authority Approved for Construction Drawings - APC
APR 07 2014
STREET LIGHTING
COLORADO AVENUE
PLAN
STA 7+50 TO 23+50

CONTRACT NO XP8902-002
DRAWING NO SL-3C-301 REV 2
SCALE 1"=40'
SHEET NO 107 OF 108

SCALES HORIZ SCALE: 1"=40' VERT SCALE: NO SCALE
SHEET
INDEX NUMBER

mingfang.song 12:10:02 PM 3/24/2014
Plot Driver=EXPO2-PDF-Full-BW.plt Pentable=EXPO2-PENTABLE.tbl
c:\projectwise\pb\projectwiseint\mingfang.song\dms09100\expo2-sl-3c-301.plg

CITY DRAWING NO. 9104
SHEET NO: 107 OF 108
DATE: 4-4 2014

REFERENCE:
SUBMITTED BY:
APPROVED BY: SAM MOUSSESSIAN, P.E., CITY TRAFFIC ENGINEER, PLANNING AND COMMUNITY DEVELOPMENT
DATE: 4-4 2014

REVIEWED: DATE: 20
REVIEWED: DATE: 4-4 2014
REC'D: DATE 4-4 2014
CITY

NO.	DATE	BY	DESCRIPTION	APPROVED
			REVISIONS	

City of Santa Monica
Department of Public Works
1437 4th Street, Suite 300 Santa Monica, CA 90401
TEL. (310)458-8721 FAX. (310)393-4425
e-mail : smengineering@smgov.net

Plotted by: mingfang.song 3/24/2014 c:\projectwise\pb\projectwiseint\mingfang.song\dms09100\expo2-sl-3c-301.plg

Sheet Version 2.01

NOTE: THIS PLAN ACCURATE FOR STREET LIGHTING WORK ONLY.

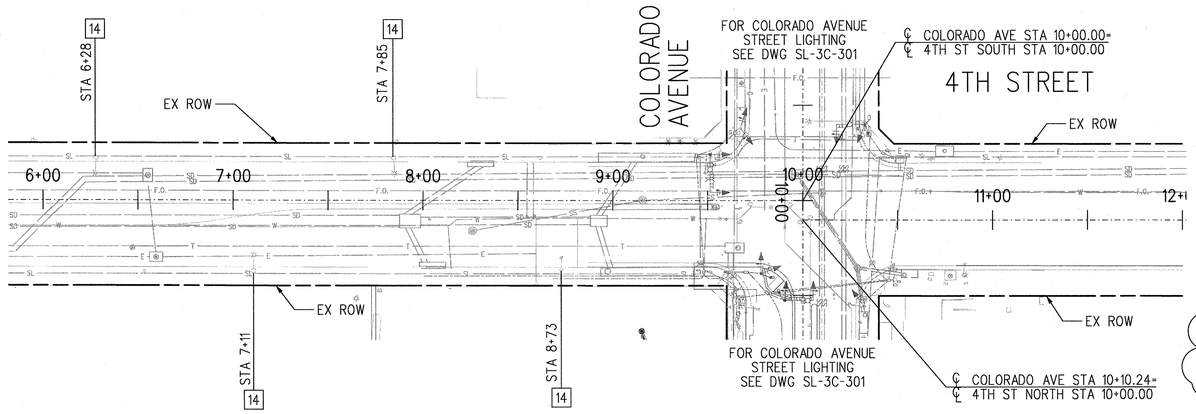

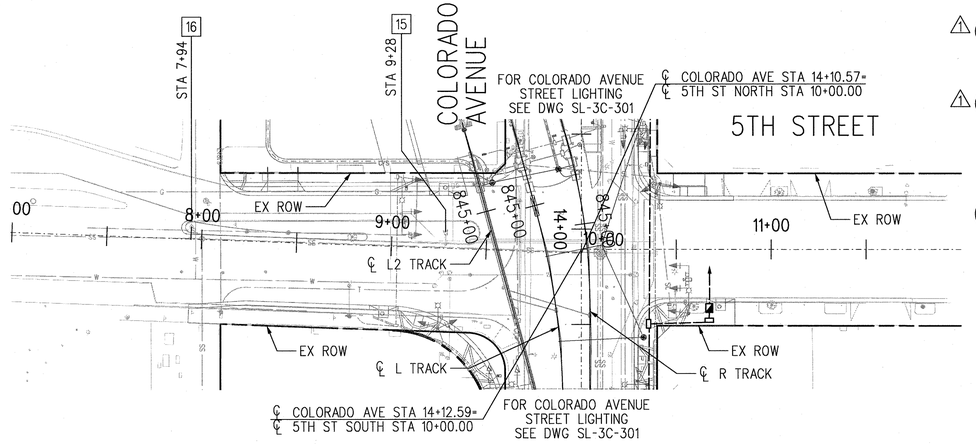

STREET LIGHTING CONSTRUCTION NOTES

1. FURNISH AND INSTALL 3*6 (BLACK, RED, AND WHITE) AND 1*6 (GREEN-GROUND) WIRES INTO NEW OR EXISTING CONDUIT.
2. FURNISH AND INSTALL NEW METERED TYPE III-BF ELECTRICAL SERVICE ENCLOSURE, 120V/240V WITH ONE 100A METER FOR STREET LIGHTING, AND 2 SINGLE POLE, 30 AMP CIRCUIT BREAKER FOR EACH NEW LIGHTING CIRCUIT.
3. FURNISH AND INSTALL *3 PULL BOX.
4. FURNISH AND INSTALL 2" CONDUIT.
5. NOT USED. 1
6. FURNISH AND INSTALL TYPE C-1-A 26' CONCRETE POLE AND CONSTRUCT FOUNDATION PER SSPWC STANDARD PLAN 430-1, 6' TOP MOUNTED MAST ARM-TYPE II PER SSPWC STANDARD PLAN 434-1 WITH LEOTEK ECOBRA-HEAD STREET LIGHT, EC3-11M-MV-NW-3-GY-700MA, 4000K.
7. NOT USED.
8. FURNISH AND INSTALL 26' POLE AND CONSTRUCT FOUNDATION PER SSPWC STANDARD PLAN 430-1 FOR STRING LIGHTING.
9. NOT USED. 1
10. FURNISH AND INSTALL 3"C CONDUIT WITH PULL ROPE PER SCE REQUIREMENTS. SERVICE POINT CONNECTION PENDING SCE COORDINATION.
11. NOT USED. 1
12. FURNISH AND INSTALL LED STRING LIGHTS AT 24" LAMP SPACING. FURNISH AND INSTALL LIGHT COLORED CABLE FOR EXPOSED WIRING. INSTALL STRING LIGHTS FROM TOP OF POLE TO TOP OF POLE.
13. FURNISH AND INSTALL 2" RIGID STEEL CONDUIT PER DETAIL "A" ON DWG NA-3B-301.
14. REMOVE EXISTING 200W HIGH PRESSURE SODIUM FIXTURE FROM EXISTING STREET LIGHTS AND REPLACE WITH LEOTEK ECOBRA-HEAD STREET LIGHT, EC7-18M-MV-NW-3-GY-700MA, 4000K FIXTURE. RECONNECT NECESSARY STREET LIGHT WIRES FOR FUNCTIONING STREET LIGHT SYSTEM. EXISTING STREET LIGHT POLE TO REMAIN IN PLACE. 1
15. REMOVE AND SALVAGE EXISTING STREET LIGHT POLE AND LUMINAIRE. REMOVE EXISTING FOUNDATION. SEE GENERAL NOTE 14 ON TRN-3C-301 FOR FOUNDATION REMOVAL.
16. PROTECT EXISTING STREET LIGHT IN PLACE.

CSM CONDITION OF APPROVAL: "THE EXISTING CIRCUIT ON 4TH STREET BETWEEN COLORADO AND PICO IS A HIGH-VOLTAGE SERIES CIRCUIT. CONVERTING FIXTURES TO THE NEW DESIRED LED UNITES WILL REQUIRE A TRANSFORMER TO BE LOCATED IN THE PULL BOX. THE CITY CAN PROVIDE ONE SAMPLE TRANSFORMER UNIT."

SRJV NOTES THAT SINCE THE LED FIXTURES ARE A CSM REQUESTED BETTERMENT, THE RESPONSIBILITY OF PROCUREMENT OF ADDITIONAL TRANSFORMER UNITS WILL BE DETERMINED THROUGH NEGOTIATIONS OF THE CHANGE NOTICE.

1. ALL WIRING/INSULATION SHALL BE THW.

2. THERE NEEDS TO BE A WEATHER PROOF HOLDER INSTALLED WITH A 5 AMP FUSE IN THE PULL BOX NEXT TO EACH STREET LIGHT POLE. THREE #10 THW WIRES NEED TO BE INSTALLED IN THE PULL BOX FROM THE FUSE HOLDER TO THE STREET LIGHT FIXTURE RED OR BLACK DEPENDING ON THE COLOR OF THE CIRCUIT WIRE WHITE AND GREEN.

3. INSTALL A 4 WIRE CIRCUIT SYSTEM (HOT-HOT-NEUTRAL-GROUND) WITH AN A-B CONFIGURATION WHERE RED/WHITE CONNECTED TO ODD NUMBER POLES AND BLACK/WHITE CONNECTED TO EVEN NUMBER POLES.

(3RFI 20062)

LEGEND

- RIGHT OF WAY
- CENTERLINE
- EXISTING SIGNALIZED INTERSECTION
- PROPOSED STREET LIGHT
- PROPOSED PULL BOX
- PROPOSED CONDUIT
- EXISTING POWER POLE
- EXISTING STREET LIGHT
- PROPOSED SERVICE CABINET
- EXISTING SERVICE CABINET

Exposition Construction Authority
Approved for Construction
Drawings - AFC
JAN 16 2014

SRJV
JAN 17 2014
ISSUED FOR CONSTRUCTION

40' 20' 0 40' 80'

REV	DATE	BY	APP	REG NO	EXPIRES	SEAL HOLDER	DESCRIPTION
1	12/02/13	MB	JJM	C65218	09-30-15	JASON J. MELCHOR	ECI57
0	06/14/13	IC	JJM	C65218	09-30-13	JASON J. MELCHOR	APPROVED FOR CONSTRUCTION

REVISION DATES (DESIGN STAGE ONLY)

DESIGNED BY I. CONSTANTINESCU
DRAWN BY M. BIERY
CHECKED BY J. MELCHOR
IN CHARGE D. ADRIAN
DATE 06/14/13

REGISTERED PROFESSIONAL ENGINEER — JASON J. MELCHOR — No. C65218 — Exp. 09-30-15 — CIVIL — STATE OF CALIFORNIA

Exposition Metro Line Construction Authority
Expo
EXPO SKANSKA RADOS
444 South Flower Street
Suite 2200
Los Angeles, CA 90071
TEL (213) 443-7463
FAX (213) 362-9481

PARSONS BRINCKERHOFF
PARSONS BRINCKERHOFF and Associates, Inc.
445 SOUTH FIGUEROA STREET SUITE 1400 LOS ANGELES, CA 90017 TEL: (213) 201-4040

EXPOSITION LRT PROJECT- PHASE 2
STREET LIGHTING
4TH STREET AND 5TH STREET
PLAN

CONTRACT NO XP8902-002
DRAWING NO SL-3C-302 REV 1
SCALE 1"=40'
SHEET NO 108 OF 108

michelle.biery 3:48:58 PM 12/4/2013
Plot Driver=EXPO2-PDF-Full-BW.plt Pentable=EXPO2-PENTABLE.tbl
c:\projectwise\pb\projectwiseint\michelle.biery\dms09100\expo2-sl-3c-302.plg

SCALES HORIZ SCALE: 1"=40' VERT SCALE: NO SCALE
SHEET
INDEX NUMBER

Sheet Version 2.01

REFERENCE :
SUBMITTED BY:
CITY DRAWING NO. 9104
SHEET NO.: 108 OF 108
APPROVED BY: SAM MORRISSEY, P.E., CITY TRAFFIC ENGINEER, PLANNING AND COMMUNITY DEVELOPMENT — DATE : 1-15 20 14
REVIEWED : DATE : 20
REVIEWED : DATE : 1-15 20 14
REVIEWED : DATE : 1-15 20 14
CITY

REVISIONS

NO.	DATE	BY	DESCRIPTION	APPROVED

City of Santa Monica
Department of Public Works
1437 4th Street, Suite 300 Santa Monica, CA 90401
TEL. (310)458-8721 FAX. (310)393-4425
e-mail : smengineering@smgov.net

c:\projectwise\pb\projectwiseint\michelle.biery\dms09100\expo2-sl-3c-302.plg
Plotted by: michelle.biery 12/4/2013